REP. OF TURKEY

TED UNIVERSITY

GRADUATE SCHOOL

DEVELOPMENTAL FOCUSED CLINICAL CHILD AND ADOLESCENT PSYCHOLOGY

THE ROLE OF INTERGENERATIONAL TRANSMISSION ON THE DECISION-MAKING PROCESS OF VOLUNTARY CHILDLESSNESS

BUKET BAYKAL

ANKARA, 2021

THE ROLE OF INTERGENERATIONAL TRANSMISSION ON THE DECISION-MAKING PROCESS OF VOLUNTARY CHILDLESSNESS

A Thesis Submited To
The Graduate School
of
TED University

by

Buket Baykal

In Partial Fulfillment of The Requirements
For
Master of Science
in
Developmental Focused Clinical Child and Adolescent Psychology

ANKARA, 2021

I hereby declare that all information in this document has been obtained and presented in accordance with academic rules and ethical conduct. I also declare that, as required by these rules and conduct, I have fully cited and referenced all material and results that are not original to this work.

Name, Last Name: Buket, Baykal

Signature :

ABSTRACT

THE ROLE OF INTERGENERATIONAL TRANSMISSION ON THE DECISION-MAKING PROCESS OF VOLUNTARY CHILDLESSNESS

Buket Baykal

Master of Science, Developmental Focused Clinical Child and Adolescent Psychology

Supervisor: Assoc. Prof. Dr. Ilgın Gökler Danışman

July, 2021

The current study aims to investigate how intergenerational transmission has a role in the decision-making process of voluntary childlessness. The lived experiences of married Turkish couples were assessed through qualitative research. Genogram was used as an assessment tool to examine the role of intergenerational transmission. Semi-structured interviews were conducted with thirteen married couples, three of whom are living abroad. Data collection, analyses, and theory building were conducted based on grounded theory to assess processes. According to analyses done using MAXODA, three major categories has emerged which are (a) Family factors as a source of repetitive scenarios, (b) Intergenerational discontinuity: Breaking the social norm of child-centered living as changed scenarios and (c) Having a child in the modern world is a decision that needs serious consideration. To conclude, intergenerational transmission and discontinuity affect the decision-making process of being voluntary childless through the ways of physical/psychological and genetic factors, values, parenting strategies, early childhood experiences, and societal norms.

Keywords: Voluntary childlessness, married couples, intergenerational transmission, grounded theory, genogram, family life cycle

ÖZET

GÖNÜLLÜ ÇOCUKSUZLUĞU KARAR VERME SÜRECİNDE KUŞAKLARARASI AKTARIMIN ROLÜ

Buket Baykal

Master of Science, Gelişim Odaklı Klinik Çocuk ve Ergen Psikolojisi

Tez Yöneticisi: Doç. Dr. Ilgın Gökler Danışman

Temmuz, 2021

Bu çalışmanın amacı, gönüllü olarak çocuk sahibi olmamayı kararı verme sürecinde kuşaklar arası aktarımın nasıl bir rolü olduğunu araştırmaktır. Evli Türk çiftlerin yaşadıkları deneyimler nitel araştırma yoluyla değerlendirilmiştir. Genogram, nesiller arası aktarımın rolünü incelemek için bir değerlendirme aracı olarak kullanılmıştır. Yarı yapılandırılmış görüşmeler, üçü yurt dışında yaşayan on üç evli çiftle yapılmıştır. Veri toplama, analizler ve teori oluşturma, süreçleri değerlendirmek için gömülü teori aracılığıyla yapılmıştır. MAXODA kullanılarak yapılan analizlere göre, a) Tekrarlayan senaryoların kaynağı olarak aile faktörleri, b) Nesiller arası süreksizlik: Değişen senaryolar olarak çocuk merkezli yaşama sosyal normunu kırma ve son olarak, c) Modern dünya çocuk sahibi olmak ciddi bir şekilde düşünülmesi gereken bir karardır olmak üzere üç ana kategori ortaya çıkmıştır. Sonuç olarak, kuşaklararası arası aktarım ve süreksizlik, fiziksel/psikolojik ve genetik faktörler, değerler, ebeveynlik stratejileri, erken çocukluk deneyimleri ve toplumsal normlar gönüllü çocuksuzluğu karar verme sürecini etkiler.

Anahtar kelimeler: Gönüllü çocuksuzluk, evli çiftler, kuşaklararası aktarım, gömülü teori, aile yaşam döngüsü, genogram

To My Lovely Parents…

ACKNOWLEDGMENTS

I am very thankful to my thesis advisor, Associate Prof. Dr. Ilgın Gökler Danışman, for her assistance and guidance. Throughout the whole process, she supported me whenever I needed help. I am grateful for working with her!

I feel so lucky to have such a supportive family. Thank you to my mother, father, and my lovely sisters they were always supporting me. They showed that they have always trusted me even the times I have some doubts that I will write this thesis. Also, I would like to express my deepest gratitude especially to my mother, thank you for the understanding you always show me the way you are. I would like to thank her for all kinds of support.

I would like to thank to my lovely friends, Elif Sert, Melis Sürücü, Gizem Özkul, Hüdanur Akdemir and Afife Karabayır, I feel so lucky to know each one of you thanks to my dearest METU. Also, I have such a wonderful family thanks to my lovely TED, İsmail İnan, Banu Özen, İlayda Korkutmaz, Işıl Çukurova, and Sinem Çelik thank you so much for your encouragement and support.

My deepest thank is to my beloved partner Berkan Cengiz. I would like to express my gratitude for his positivity, compassion, love, empathy, endless motivation, and so valuable friendship. Thank you for always being with me!

Lastly, it would be missing without thanking my lovely participants. They were so open to sharing their living experiences, ideas, and personal history. I enjoyed alot having interviews with you throughout the whole process.

TABLE OF CONTENTS

PLAGIARISM. iii
ABSTRACT iv
ÖZET vi
DEDICATION viii
ACKNOWLEDGMENTS ix
TABLE OF CONTENTS x
LIST OF TABLES xiii
LIST OF FIGURES/ILLUSTRATIONS/SCHEMES xiv
CHAPTER
1. INTRODUCTION 1
1.1 Theoretical Background… 1
1.1.1 Family Development Theory/ Family Life Cycle 1
1.1.2 Family Life Cycle of Voluntary Childfree Couples…..... 2
1.1.3 Family Change Theory…..... 3
1.2 The concept of voluntary childlessness….....3
1.3 How the decision-making process going on… 4
1.4 Childlessness as a Dyadic Process… 4
1.5 Historical trends of being voluntary childless in Turkey… 5
1.6 The increased emphasis on parenting and the perceived requirement of parenting skills in the modern 6
1.7 The social construction of motherhood and pronatalism 7
1.8 The stigmas and stereotypes of voluntary childless couples are exposed to ……8
1.9 The motives to remain childfree 9
1.10 The concept of the intergenerational transmission and discontinuity…10
1.11The role of intergenerational transmission on the decision-making process to remain voluntarily childless 11
1.12 The aim of the study..... 14
1.13 The significance of the study… 15

2. METHOD…..... 17
2.1 Methodological Background…..... 17
2.1.1Qualitative Research… 17
2.1.2 Grounded Theory 17
2.2 Measures 18
2.2.1 Semi-Structured Interviews…..... 18
2.2.2Genograms… 19
2.3 Sampling and Participants..... 20
2.4 Procedure.....24
2.4.1 Pilot Interview..... 24
2.5 Data Analyses….....26
2.6 Trustworthiness of the current study…..... 26
2.7 Reflexivity…..... 27
3. RESULTS 30
3.1 Family factors as a source of repetitive scenarios.....31
3.2 Intergenerational Discontinuity: Breaking the Social Norm of Child-Centered Living as Changed Scenarios.....46
3.3 Having a child in the Modern World is a Decision that Needs Serious Consideration 54
4. DISCUSSION 68
4.1 Family factors as a source of repetitive scenarios.....68
4.2 Intergenerational Discontinuity: Breaking the Social Norm of Child-Centered Living as Changed Scenarios.....73
4.3 Having a child in the Modern World is a Decision that Needs Serious Consideration 77
4.4 Clinical Implications 81
4.5 Limitations and Future Research.....82
4.6Conclusion… 83
REFERENCES.....84
APPENDICES

A. DEMOGRAPHIC INFORMATION QUESTIONS 96
B. SEMI-STRUCTURED INTERVIEW QUESTIONS 98
C. STANDARD GENOGRAM SYMBOLS 102
D. GENOGRAMS OF MARRIED COUPLES 106
E. APPENDIX E: INFORMED CONSENT..... 119
F. SOCIAL MEDIA ANNOUNCEMENT TEXT 121
G. ETHICAL PERMISSION……..122

LIST OF TABLES

TABLES

Table 1 Socio-demographic Characteristics of the participants..... 22

Table 2 Grounded Theory of the Role of Intergenerational Transmission on the Decision-making Process: Main Categories and Subcategories 30

LIST OF FIGURES

FIGURES

Figure 1 Basic genogram symbols 102
Figure 2 Family relationships..... 102
Figure 3 Emotional relationships 103
Figure 4 Symbols denoting addictions, and physical or mental illnesses 104
Figure 5 Colors denoting addictions and medical conditions 105

CHAPTER 1

INTRODUCTION

1.1. Theoretical Background

1.1.1. Family Development Theory/ Family Life Cycle

According to Bowen, the notion of family is identified as a system (1966). Likewise, families incorporate various subsystems, they also belong to the larger system, so the idea is that there is a solar system which is a subsystem of the larger system, the universe. The level of functioning of one system both affects the other systems and is affected by them. For instance, individuals are related to their family system, their surroundings such as neighbors, communities, the environment, and the larger context (1966). So, General Systems Theory is based on the hypothesis that the whole system is something more and different than the sum of separated parts (Fingerman & Bergmann, 2000). According to Bowen, Family System Theory is an approach that "emphasizes the idea that families are continuous entities with rules, beliefs, and values that shape and are shaped by individual members over time" (Fingerman & Bergmann, 2000). According to that approach, families are accepted as emotional systems in which individuals are connected. Within the boundaries of the system, behaviors of one family member both affect the other's behavior and are affected by them in predictable ways, in this way certain patterns develop (Genopro, n.d) Since the contact between family members generally continues through adulthood (Fingerman & Bergmann, 2000), the family of origin continues to affect adult's daily lives and family system theory investigates how and why the family of origin may maintain one of the main forces throughout the adulthood years. According to Bowen, each family in the system has some purposes which infer the joint behavior of members of a system, values, and beliefs about themselves and the world they live in, patterns of behavior, and communication (1978, p.248). For instance, while for some families, obedience and loyalty are the most important values, other families give more emphasis on the independence and creativity of each member over family togetherness (Fingerman & Bergmann, 2000), through the behaviors, attitudes, opinions were transmitted from one generation to another.

Since with the twenty-first-century attitudes toward motherhood are changing in a way that younger women might become more comfortable to express their decision about being voluntary childlessness (Settle & Brumley, 2014), and also the increased opportunity of labor-force participation, female education, and women rights movement (Gillespie, 2003) in this way, families became more diverse and the number of non-traditional family forms such as single-parent families, voluntary childlessness, families with adopted children or non-heterosexual families was increasing (Peterson & Steinmetz, 1999, p. 2, & Macklin, 1986, p. 323). When we look at the family life cycle, families pass several stages throughout their life; however what family life cycle is normal is difficult to determine since there is a variety of different families and cultures (Carter, Garcia- Petro, McGoldrick, 2014, p.15). When it is looked at the normative family life cycle, the first stage is 'leaving home: emerging young adults'; the key transition of the stage is accepting economic and emotional responsibility for oneself. Increased differentiation from the family of origin, development of financial independence and work, and the development of close peer relationships are some of the possible changes that young adults experience (Carter et al, 2014, p.16). The second stage is 'joining of families through marriage/ union'; the key transition is the loyalty of the new system. It is required to develop the partner relationship and rearrange the relationships with the extended family, peers, larger society, and social system to add the new partner. Further stages are named as the developmental cornerstones of children such as families becoming parents, with young children, adolescents, in launching and later life (Carter et al, 2014, p.16).

1.1.2. Family Life Cycle of Voluntary Childfree Couples

The normative family life cycle is constructed by Carter and McGoldrick (1998), who assumes that all families have children (Pelton & Hertlein, 2011). Because of this assumption, the normative life cycle is not corresponded with the stages that voluntary childless couples experience. When we look at the stages they have passed through, the first task is the decision-making process which is couples should have come to a conscious decision. Secondly, they need to manage stigma and pressure from their surrounding like families, friends, colleagues, or larger society and build a social support system. Thirdly, couples pass through defining an identity, in this stage, they

explore their abilities and what they want to pursue in their lives. Lastly, they generally build a support system and want to leave the legacy.

1.1.3 Family Change Theory

Family change theory proposed by Kağıtçıbaşı (1990) based on the value of children studies. According to these studies, the utilitarian/economic value of children reflects child's material contribution both when they are young and when they are in adulthood as old-age security (Kağıtçıbaşı & Ataca, 2015). This dependency of the family on children is more in common collectivistic societies and rural areas which are identified as a *family model of interdependence* where there is strong loyalty, material, and emotional closeness, and hierarchies, consequently there is a high fertility rate (Mayer, 2013). Whereas in *the family model of independence*, there is a low fertility rate, low emphasis on both material and emotional interdependence, but high individual autonomy is valued. This type of family orientation is more valid in Western countries where the social security system provides people with institutional care as old-age security, the child's economic value is low instead brings high responsibility for parents (Mayer, 2013). Lastly, *a family model of psychological interdependence* is mainly related with especially the urban and/or more developed societies together with cultures of relatedness. Increased wealth decreases the material dependence on the children, but cultural relatedness is still important for a family which brings psychological dependence (Kağıtçıbaşı &Ataca, 2015).

1.2. The concept of being voluntary childlessness

The definition of "voluntarily childless," "childfree," and "intentionally childless refer to couples who do not want children. The term childfree is generally preferable to childless since the former implies a choice and freedom, while later implies that these couples have lack something (Hee Lee, 2011). However, some people prefer the term of childlessness for similar reasons and they did not want to highlight the freedom of responsibilities as they respect parents and they think that the term of childfree implies as if they hate children (Hee Lee, 2011). So, voluntary childless consists of both preference and respect for the people who choose parenthood.

1.3. How the decision-making process going on

Couples who do not want to have children might have different pathways to childlessness, however, according to Cooper, Cumber, and Hartner (1978), the decision-making process consists of rational discussion, specification of life values, and careful consideration of the motives for each spouse. In the literature, there are a bunch of studies that investigate the process of decision- making, how couples choose to become voluntary childless (Blackstone, Stewart, 2012). For example, emerging themes are mainly based on active and passive deciders, while active deciders women who have never want to have a child, passive deciders whose decisions are happenstance or ambivalent towards having a child (Settle & Brumley, 2014). Some couples already made their decision before the marriage, some think and argue the pros and cons of raising a child and make their decision after they married (Cooper et al., 1978). Although the childbearing decision seems to be more important for women than men since motherhood is attributed a core identity for womanhood, there is no significant finding that women are more influential than men, however, they are seen as responsible, and selected for pressure, adverse sanctioning (Cooper et al., 1978).

1.4. Childlessness as a Dyadic Process

As it is mentioned, the investigation of the decision-making process of voluntary childless people is mainly discussed with women since there is a bias that women are the main deciders it might because of the attribution of women's primary responsibility on childbearing (Hee Lee, 2011). Some studies ignore men's role, thoughts, and motives on child freedom during the process of this important decision and only include women's perspectives (Settle & Brumley, 2014). According to Carmichael & Whittaker, there are two scenarios that one is both partners made their decision early in their lives or at the beginning of the relationship, so the decision is rigid throughout the relationship. The second scenario is that while one partner made his/her decision as an early articulator, the other partner is ambivalent but as a result of the certain decision of one partner, the other becomes voluntary childless by circumstance. Therefore, it is a dyadic process between couples where they influence each other (Hee Lee, 2011). Moreover, since the decision-making is a process, the decision of remaining voluntary childless does not necessarily irrevocable (Carmichael

& Whittaker, 2007), sometimes couples have doubts and reexamine their decision, it can be changed based on personal, social circumstances and their priorities (Carmichael & Whittaker, 2007). As the decision-making is a process, both voluntary and involuntary childless individuals state that this is not a static, unchanging decision, instead, they indicate their standing is at the middle as a potentially shifting over time (Letherby, 2002).

1.5. Historical trends of being voluntary childless in Turkey

There are significant transformations in Turkish society during the last three decades. The increased urbanization has taken place where the population in urban cities becomes 65 percent of the total country (Kağıtçıbaşı & Ataca, 2005). The increased level of education and industrialization have resulted from basic changes in lifestyles, therefore, living in urban cities brings along longer dependency on parents for adolescents who continue their education for a longer period and increased the number of students who are in school. Likewise, in the traditional family with rural and low socioeconomic status, growing children are expected to provide them material support and security when they get older (Kağıtçıbaşı & Ataca, 2015). The value of children is identified "as the total of psychological, social, and economic costs and benefits that parent derive from having children." (Kağıtçıbaşı & Ataca, 2005). While economic/utilitarian values of children are material advantages of having a child both when they are young because of the expected involvement as economic contributors of household economy and chores and when they become an adult since they are regarded as old-age security for parents. Moreover, joy, fun, companionship, pride, and a sense of accomplishment are identified as examples of the psychological value of the child as a result of being a parent. Lastly, the social value of child represents the social acceptance when individuals have a child and son preference to achieve continuation of a family name especially in traditional societies (Kağıtçıbaşı & Ataca, 2015). According to that investigation, the most significant change through three decades is while there is a strong increase in the psychological value of the child and significant decrease in utilitarian/economic value of the child, involving old-age security and as the value of child and the cost of raising a child had increased, so the birth rate declines respectively (Kağıtçıbaşı & Ataca, 2005).

1.6. The increased emphasis on parenting and the perceived requirement of parenting skills in the modern world

While giving physical care can be identified as supplying the material needs of the child like feeding, buying cloths, changing one's diaper, putting one's to sleep and giving safe shelter, etc, parenting is a broader and more complicated concept that includes not only providing material caring but also giving love, affection and required support for a child to develop fully in terms of physical, social and psychological development from their birth to the adulthood (Brooks, 2013, p.6). In modernized societies, a lot of families feel like nuclear families which are more disconnected from their extended family, neighborhoods, and communities (OECD, 2016, Zahran, 2011). Since informal social support and safety zone have decreased as a result of this situation, many families feel more responsible for their children's welfare, think that they need to provide nurturing, protection, and oversight without taking much help from extended family and community (Pimentel, 2016). On the other side, although in the digital era, families can obtain information and digital support more easily than ever, globalization and technology have accelerated the competition and uncertainty in the labor market (Radey & Randolph, 2009). As the development of knowledge on how parenting affects child development is increased, it is known more deeply the potential role of parenting on a child's cognitive-academic development and job success, emotional development and well-being, social development and relationships, physical development, and health (Ulferts, 2020). When we look at the historical trend of different parenting styles, it can be talked about the general shift from authoritarian parenting to authoritative parenting style which requires more demandingness and high responsiveness in more industrialized societies. (Doepke and Zilibotti, 2014; Bray and Dawes, 2016). So according to Gauthier and her colleagues, families spend more quality time with their children and parental control (2004). Likewise, Dotti and colleagues stated that especially for higher educated parents, there is a general increase in spending time on childcare from 1965 to 21.st century (2016). Moreover, Craig and her colleagues (2014) found that Australian parents spend more time with their children to have a chat, teach, read and play games, help them to sleep, and accompany them to school and/or other appointments, etc. So according to many childless individuals, parenting symbolizes as overwhelming, scary, stress-filled, discouraging,

as requiring high abilities or talents, they were afraid not to meet these expectations (Park, 2005).

1.7. The social construction of motherhood and pronatalism

There is also the general effect of the women's rights movement on the attitude towards having a child. Motherhood is a socially constructed phenomenon. The rise of the rejection of motherhood shows how modernity has provided a variety of possibilities for women to create what fulfilling gender identity means for them which is different and distinct from the hegemonic notion of motherhood (Gillespie, 2003). Since many women reject motherhood as their central identity, an increased number of women think that it is okay to be voluntary childless (Carmichael & Whittaker, 2007). It is the case that some women neither see motherhood as a cornerstone for their identity nor see it as a personal fulfillment (Carmichael & Whittaker, 2007). It is seen as a sacrifice for voluntary childless women because of highly weighed responsibilities on women's shoulders and as a risk due to high standards of societal expectations on what "good mother" corresponds to (Settle & Brumley, 2014). Internalization of societal expectations can be difficult for women as they might be afraid not to fulfill the requirements of what makes a "good" mother (Settle & Brumley, 2014). Voluntary childless women assert that they are aware of the stereotypes of motherhood, the unequal burden of work both in the domestic and public sphere when they would become a mother, the adversities they would probably face while trying to balance between work and family responsibilities and the high possibility of their assigned primary caregiver role (Carmichael & Whittaker, 2007). A lot of studies emphasize that women see motherhood as an obstacle for a career road since it requires a full-time enterprise (Park, 2005). Staying out of the framework of motherhood roles are attributed as more deviant for women as opposed to men's abandonment of fatherhood because while the notable characteristic of femininity is mostly attributed to motherhood identity (Cooper et al, 1978), masculinity is defined by work/career achievements and gender expectations from males are based on their more individualistic nature than are females (Park, 2005). Therefore, men expect less social pressure around it unless they are from highly pronatalist cultures (Park, 2005). Pronatalism is identified as the encouragement of childbearing and promoting

motherhood as a central identity for women in society as if it is mandatory (Heitlinger, 1991, p.344). Protanalism can be a strong cultural orientation that controls childbearing behaviors in our society (Hee Lee, 2011). According to Veevers, the definition of pronatalism contains not only policies but also attitudes and cultures that reinforce raising a child and parenthood (as cited in Hee Lee, 2011). For example, in a lot of studies, one of the main influences of pronatalist beliefs is the adverse attributions and stereotypes about voluntary childless couples' experiences (Park, 2005). Those people who want to be voluntary childless want to pursue a lifestyle that is desirable and fulfilling but is not acceptable from society (Cooper et al., 1978).

1.8. The stigmas and stereotypes of childfree couples are exposed

Although the attitudes towards motherhood, parenting, and child freedom have changed, voluntary childless couples are still exposed to some prejudices, stereotypes, or harassment (Shaw, 2011, p.48). According to her interviews with 10 heterosexual couples, childfree couples are labeled as immature, deviant, anti-children, unfulfilled. They are also stereotyped as less nurturant, immature, and at the same time more materialistic (Park, 2005). Individuals who are childless by choice might be regarded as if their lifestyle reflects "excessive" individualism, loss of family connection, and a tendency toward impersonal, rationalized acts and involvements in society (Park, 2005). While childless women are stereotyped as adverse adjectives like selfish because they do not want to make priorities of parental responsibilities over their wishes (Gillespie, 2003) and/ or their decision of being childfree is seen as psychopathological (Hird & Abshoff, 2000). While women who have children are seen as patient, selfless creatures, responsive or dedicated their lives to their children, in this way, voluntary childless women are placed right across this distorted image (Maher & Saugeres, 2004). According to Durham, the decision ofremaining childless is perceived as more women's job than men's (2008), for instance, they are more expected to quit their jobs and take the responsibility of childbearing (Katz- Wise et al, 2010).

1.9. The motives to remain childfree

As there is an increasing trend toward voluntary childlessness, a lot of studies have emerged to investigate the motives of childfree couples assert (Gillespie, 2003).

Macro-level changes such as the women's rights movement especially second-wave feminism's emphasis on the rights for contraception and abortion increased access to reproductive choices and labor force participation which enhance women's accession and/or offer other alternatives rather than raising a child in this way their decision on whether and when they become mothers are affected respectively (Gillespie, 2003). On the other side, micro-level factors also influence women's decisions on being childfree. According to Settle and Brumley, this can be examined into three categorizations, the benefits of child freedom, the costs of childbearing, and lastly, constraints against childrearing (2014). The benefits of child freedom are "freedom of lifestyle, autonomy/independence, self-development, greater financial position, travel more time with partner and others". For example, many women express a lot of attractions related to experiencing a childfree lifestyle, in this way child freedom is linked with wider opportunities, broader choices, spontaneous life decisions, and also give chance for the closer intimate relationship (Gillespie, 2003). Although there are societal limitations such as the insufficient legal rights about family leave policies and daycare services, individuals might tend to analyze women's career/domestic responsibilities at an individual level (Park, 2005). On the other hand, a childfree lifestyle allows doing anything, anytime you want to do it (Settle & Brumley, 2014). Secondly, the costs of childbearing are "children as disruptive, loss of independence, lifelong responsibility, financial risk, unequal marriage and career vs. children" (2014). Women radically reject motherhood and the activities associated with it due to the loss of identity, independence associated with childrearing, and also viewing motherhood with unfulfilling, high burdened care and nurturing activities (Gillespie, 2003). For instance, it is seen as a sacrifice, a barrier for a work career, and required a lifelong commitment (Gillespie, 2003; Park, 2005). Moreover, women are afraid of the possibility of not being good mothers due to societal expectations of nurturing over women, being a good mother is associated with the loss of independence, putting others first and children are seen as a burden in terms of financial responsibilities (Settle & Brumley, 2014). Finally, constraints are "no longing toward motherhood emotional expectations, pregnancy as "barbaric", no partner, lack of social support and childhood experiences" (Settle & Brumley, 2014). According to voluntary childless women, there is a high emotional risk on motherhood, since they do not have maternal

instincts to become a “good” mother (Settle & Brumley, 2014). For some women lack of maternal instinct, desire for a career, and/or certain lifestyle lead to remain childless lifestyle but for some other women it is not because of career and/or lavish life style, it is due to only lack of maternal desire or disinterest in children to pursue (Carmichael & Whittaker, 2007; Park, 2005). It is also paradoxically the case that there are a lot of professionally expert people, they would be competent parents if they would have a child, but they do not want to experience a primary parent role in their lifetime (Carmichael & Whittaker, 2007).

According to Carmichael’ and Whittaker’s in-depth interviews with 115 heterosexual couples, although there is a considerable variety in terms of the paths that are chosen, they stated that there are two important forks in a road, which are ‘childlessness by choice’ and ‘childlessness by circumstance (2007). Firstly, for whom identified themselves as childless by circumstance, uncertain and unstable romantic relationships affect the way, thereby, they stated that there is a lack of partner who is willing to take the responsibilities and lifelong commitment that parenthood requires and/or they want to pursue a career allowing no time for children (2007). Secondly, couples who chose childlessness do not want to change their lifestyle, they state time constraints, and financial burden, reject maternal roles and want to bypass motherhood, tend to adopt pets by seeing them as their children, also some of their emphasis the environmental problems and the state of the world as motives to remain childless (Carmichael & Whittaker, 2007). According to those individuals, instead of bringing, not bringing a child into this world a rational decision when we think of how human beings get overpopulated on this planet and how they environmentally damaged nature and the lives of other species (Park, 2005).

1.10. The concept of the intergenerational transmission and discontinuity

According to the systemic perspective, intergenerational transmission is broad, “patterns of interactions or relationships in families can be replicated from one generation to the next” (Stabler, 2013). Bowen states that there is a multi-generational transmission of family patterns which describes “how patterns, themes and positions (roles) in a triangle are passed down from generation to generation through the projection from parent to child” (Brown, 1999). According to Bowen, he stated that

“families repeat themselves” in terms of psychosocial, physical, and mental health issues (McGoldrick, Gerson & Petry, 2008 p.15). In other words, how patterns repeat or alternate over generations at least through three generations is one of the main concerns of Bowen’s theory (p.15). Since though the genograms, families are examined in a broad context both in a vertical way through the generations and horizontal way across the family context (McGoldrick et al, 2008, p. 5). While vertical considerations are politics, sexism, racism, violence, family emotional patterns, triangles, myths, genetic abilities, and disabilities or religious beliefs, horizontal ones are life cycle transitions, unpredictable incidents, or historical events that affect the specific cohort (p.16). Since family connections and relationships predispose to be reciprocal, are taking place through patterns, and might be repetitive, genograms can provide a great tool to make tentative assumptions (p. 14).

In addition to intergenerational transmission, there is also a concept of intergenerational discontinuity which can potentially impact the decision-making process of voluntary childlessness. The intergenerational discontinuity can be identified as breaking the cycle of transmission through the generations. Cross-generational alliances or conflicts might be repeated over generations unless individuals work to change these kinds of patterns so that their children were not subjected to them (McGoldrick, Gerson & Petry, 2008, p. 169). According to Shaw’s study on the experiences of women’s voluntary childlessness, it is found that the existence of poor maternal relationships might result in, probably unconsciously, an avoidance of repeating the cycle with their children (2011).

1.11. The role of intergenerational transmission on the decision-making process to remain voluntarily childless

When we look at how and what can be transmitted over generations, for example, according to Serbin and Karp, parenting might be transmitted over generations, the next-generation might use similar parenting strategies which their parents have used during their childhood (2003). Some voluntary childless families may think that they cannot be good parents because their parents were not regarded as good parents as well and/or they think that they might repeat these ‘bad’ parenting behaviors for their children (Park, 2005). Likewise, in Settle and Brumley’s qualitative

interviews, a few women mentioned how the decision of being voluntary childless was affected by their relationship with their parents since they were afraid to be anything similar to their parents (2014). In other words, they are afraid to turn out to become like their parents. For example, both men and women stated that they remembered their parent's parenting behaviors as demanding and restrictive, or they expressed that they have negative childhood memories which affect the decision as well (Carmichael & Whittaker, 2007). According to Park (2005), it is not only the influence of the relationship of their parents, but the observation of parenting models in their lives also affects the decision of being voluntary childless especially for female respondents. Participants acknowledge both the observation of parents and nonparents in their social environment, how they make sense of the experiences in their family of origins, affect the interpretation of challenges and joys of various childrearing preferences, and determine their final decision. Therefore, Park acknowledges that these parenting models have an important contribution to specify the reasoning of childlessness and generate powerful emotions during the evaluation of their possible parenting experience (2005). For example, they think that the friends or siblings with children have difficulty raising their children because of financial restrictions and time limitations to do anything they want to do.

In addition to the intergenerational transmission of parenting and discontinuity, some research investigated the intergenerational transmission of anxiety (Affrunti &Woodruff-Borden, 2014; Starr, Conway, Hammen, & Brennan, 2013; Mitchel et al., 2013). While the heritability of anxiety disorders of genetic transmission ranges from %30 to %73 for younger children (Bolton et al., 2006), anxiety symptoms range from %65 to %75 for the adolescent population (Ask, Torgersen, Seglem, & Waaktaar, 2014). For example, because the existence of parents' anxiety was correlated with infant chronic hyperarousal at 4 months, which in turn results of infant fearful temperament at the age of 2.5 years, this study supports chronic hyperarousal as a mechanism clarifying the intergenerational transmission of anxiety disorders (Vente, Majdandzic, & Bogels, 2020). So according to Park, they found that some of the respondents might be afraid to repeat their parents' unwanted characteristics such as being a fearful, distracted, or too anxious parent, in order not to harm a child unintentionally, they decide not to bring into the world (2005). Moreover,

perfectionism, impatience, and introversion are some of the personality characteristics which reinforce the fear of becoming bad parents (Park, 2005; Houseknecht, 1987). In the literature, they explained that this belief might come from their family of origin and their own experiences in childhood (Hee Lee, 2011). Some of the individuals are already aware of their personality characteristics and they emphasize that because of their personality characteristics, they are too anxious and always think that something might be happening to their children (Settle & Brumley, 2014). In terms of Big five personality characteristics, some voluntary childfree couples are high on independence and autonomy traits than participants' who have or want children, and also especially early articulators give more emphasis on openness to experiences (Avison & Furnham, 2015). Other couples are afraid of passing pathology or physical illness such as depression, hereditary diseases, violence, or alcoholism onto their offspring (Park, 2005). Nevertheless, many of the individuals indicate that they have grown up in a loving family and their childhood went pretty, so they either implicitly or explicitly reject that adverse childhood experiences might affect the decision-making process of remaining childfree (Park, 2005).

Voluntary childless couples may have some other reasons related to their early family experiences. For some of the female respondents, seeing the disadvantages of having a child-like the observation on discomfort and contradiction of their parents with those roles and responsibilities increase their determination not to experience similar life situations (Park, 2005). According to Veever, some voluntarily childless people report that they witness their parent's sacrifices, how they give up their goals or dreams for their children, or felt their dissatisfaction being a parent and do not want the same thing for themselves (as cited in Hee, Lee, 2011). At this point, some respondents revealed that the effect of observation on how raising a child who requires special needs and attention can be difficult and don't want to experience that (Settle Brumley, 2014). Others feel that since they already take care of their siblings and experience childrearing, therefore; they think that they do not have the need or wish for their children (Mollen, 2006). So parentification which is a role reversal between parents and the child (Borchet, Lewandowska & Rostowska, 2018) can influence on the decision-making process. While emotional parentification states that child is expected to fulfill the social-emotional needs of the family members such as being the

person who lightens the mood of family members and make effort for a good family atmosphere, instrumental parentification takes place where the child is expected to take care of the household chores, living conditions such as taking care of the younger sibling, physical work of the house or earning money (Borchet et al, 2018). According to Schier's researches (2010, 2014), there is an intergenerational transmission of parentification; individuals who were parentified when they were growing up are more likely to repeat the abnormal patterns of relationship and hierarchy to their own families (as cited in Borchet et al., 2018). On the other side, parents are valuable sources for children's social values. These values are transmitted over generations, for example, personal religiosity or gender-role attitudes (Min, Silverstein & Lendon, 2012). According to Callan (1983), experiences with the family of origin, such as the family of origin's attitudes toward fertility values, gender role relationships, and belief in world overpopulation might encourage the decision of remaining childfree. In this point, intergenerational transmission of patterns in families, for example, alcoholism, physical symptoms, patterns of relating and functioning, beliefs, resilience, strength, success as well as failure are likely to be repeated across generations (McGoldrick, Gerson & Petry, 2008, p.15-40).

1.12. The aim of the study

In the literature, voluntary childless families are investigated in terms of demographic characteristics (Heaton, Jacobson & Holland, 1999 & Hee Lee, 2011) social pressure and stigmatization (Gillespie, 2003 & Kelly, 2009) lived experiences (Mawson, 2005) marital and life satisfaction (Houseknecht, 1979; Burman & Anda, 1986) and the motives of why they want to be voluntary childless (Park, 2005), the proposed life cycle (Pelton & Hertllein, 2011) and the decision-making pathways (Settle & Brumley, 2014; Carmichael & Whittaker, 2007). However, the role of intergenerational transmission on the decision-making process has been an under investigated research area. The current research aims to understand whether and how intergenerational transmission such as family values, worldviews, triangles, patterns, psychopathology or physical illness, parenting strategies, or early childhood memories that have a role in the decision-making process of voluntary childless couples.

1.13. The significance of the study

The current thesis is important in terms of four aspects. First, fewer qualitative studies investigated the decision-making process of the childfree couples, and especially the role of intergenerational transmission in the decision-making process to being voluntary childless is an ignored area in the literature, so this study has an important contribution to the field of family psychology. Secondly, along with the interviews, the study makes use of genograms which is a highly powerful tool to investigate the intergenerational patterns and family transmission processes (McGoldrick et al, 2008, p: 3-4). Genograms have emerged as an assessment and intervention tool within family therapy practice, but they are also gaining interest of family researchers due to their ability to generate rich intergenerational data (Callaghan, Alexander, & Fellin, 2018). To our knowledge there are only few research using genogram on this subject, for instance; proposed life-cycle model for voluntary childless individuals (Pelton & Hertlein, 2011), and intergenerational history of family violence (Callaghan et al, 2018). There are also only few studies that used genogram in Turkey (Arkar ve Şafak, 2003; Işık, 2018; Örs ve Öngel, 2012; Şahin, 2017; Varol, 2015; Yaman & Akdeniz, 2011), however, these studies are not aimed to understand the experiences of voluntary childless couples. In this way, the current study has the potential to make a significant contribution to the understanding of the decision-making processes of voluntary childlessness since it is a qualitative study utilizing semi-structured interviews in conjunction with genogram questions. Thirdly, a large portion of the literature investigates why individuals identify themselves as voluntary childless rather than focusing on decision-making as a process (Blackstone & Stewart, 2012). In this study, how childless individuals either by choice or circumstance come to identify themselves as voluntary childless will be examined in terms of a psychological perspective. Fourthly, a large portion of the literature examines the decision-making pathways or motivations of voluntarily childless women by excluding the role of the men in the decision-making process (Blackstone & Stewart, 2012; Mollen 2006; Park 2005). The existing literature cannot explain the complexity of the decision-making process since both men and women are involved in childbearing, it is a couple's decision (Hee Lee, 2011). Since the decision-making process is dyadic, partners/spouses influence each other during the decision-making

process, the study has the potential to reflect the nature of the decision-making process by including couples in the sample.

CHAPTER 2

METHOD

2.1 Methodological Background

2.1.1Qualitative Research

This study relies on qualitative approach to examine how intergenerational transmission has a role during the decision-making process of being voluntary childless for married couples. It was chosen to study this subject with a qualitative approach since it allows participants to express their perspectives in their own words. Qualitative research is based on the idea that individuals construct social reality (Howitt, 2010, p.191). Every family is a unique system that should be approached within its particularity and idiosyncrasy. So, qualitative research provides rich data description, gathers different perspectives through in-depth interviews (Howitt, 2010, p.201). Also, qualitative studies are well suited to examining processes (Blackstone & Stewart, 2012) since the decision-making is a process, how individuals come up to identify themselves as voluntary childless can be well suited to study through a qualitative approach. Through the ways of this multigenerational transmission, behavioral patterns, ideas, world views, beliefs are transmitted through generations. In this regard, how intergenerational transmission has a role during the decision-making process of being childfree is well-suited to investigate with a qualitative approach.

2.1.2 Grounded Theory

The grounded theory consists of data collection, data analyses, and theory building (Howitt, 2010, p.191). The method assumes that there should be a close relationship between research data and theory building, through the data analyses, the researcher starts to build the theory based on existing empirical data, and throughout the research process, the theory is questioned, challenged, and tested (Howitt, 2010, p.188). So, the theory is built from rich data based on in-depth interviews, focus groups, narratives, etc. (Howitt, 2010, p189.). The main aim of the grounded theory is to construct a theory that explains the existing data. According to that method,

questions are aimed to understand what is going on (Glaser & Strauss, 1967, p.23) and the researcher is interested in "how individuals act, interact, or engage in a process in response to a phenomenon" (Creswell, 1998, p. 56). Data from the research create the foundation of the theory, the analyses of the data form the concepts that are constructed (Charmaz, 2006, p.2). Data is constructed by observation, interactive relation, and the materials collected about the topic. According to Howitt, "grounded theory can be used to research areas for which little or no past research is available or where qualitative methods have not been previously used" (2010, p.224). Since the grounded theory method is well suited to study processes among other qualitative methods (Hee Lee, 2011), and for the areas which little research was available, intergenerational transmission is a complex phenomenon in this research, grounded theory is used to investigate the role of intergenerational transmission during the decision-making process of childfree married couples by trying to see what is in this phenomenon within the framework of existing theories. In other words, the aim is trying to both develop a perspective using previous findings and theories and at the end discuss the findings so that it will enrich an existing system by branching out.

2.2 Measures

2.2.1 Semi-structured interviews

The semi-structured interviews consisted of sociodemographic information questions (e.g., gender, age, education status, income, history of physical or psychological treatment) along with the questions specific to the topic under investigation. Genogram drawings were done for each couple as well. Question pool which was created by researchers to get detailed information about the couples' families over three generations, childhood and adolescent years, family relationships, the decision- making process and motives and the role of intergenerational transmission. Question pool consisted of 50 questions mainly representing 7 areas of investigation: (1) questions about the family; (2) questions about the meaning attached to the family and the child; (3) questions about childhood and adolescent years, and intergenerational family relations; (4) questions about the meaning attributed to being a parent or not within the extended family; (5) questions about the decision-making process, motivations and its results; (6) questions about the societal roles of

motherhood/fatherhood and womanhood/manhood and; (7) questions of intergenerational transmission and family life cycle (See Appendix B). The questions to be asked were determined by the interviewer according to the course of the interview.

Since when the researcher focuses on the couple as the unit of investigation, conjoint interviews were done (Hee lee, 2011). The richness of the data is the main advantage of a conjoint interview (Valentine, 1999). Partners can discuss the subject and make clear their opinions, or the information shared by each partner provides further detailed information (Hee lee, 2011). Another advantage of the conjoint interview is that it enables couples to state their own opinion on the same topic or experience which neither spouse aware of that fact until the other party comes out during the interview (Hee lee, 2011). Moreover, the relationship between the partners may give huge valuable non-verbal information about the couple (Allan, 1980).

2.2.2 Genogram

Genograms has been established in the early 1980s by certain key persons such as Murray Bowen, Jack Froom, and Jack Medalie to be used in family therapy and family medicine (McGoldrick et al., 2008, p.1). It is also widely accepted and proven that genogram has a good fit with qualitative research (Karakus &Erkan, 2019). The genogram is a useful tool to use as an assessment in qualitative research since it motivates participants to tell their stories (McGoldrick, et al., 2008, p. 287). The standardized genogram format has been created with certain symbols that help to get through family history and relationships over the past three generations (See Appendix C) obtaining information both horizontally through family context and vertically through generations. Genogram drawing starts with the basic demographic information such as, people's names, their ages, who are married, how many children they have, if any divorce within the family, what about the deaths and the reasons, etc. Moreover, genograms give enrich information about family members and relationships and the entire life cycle of the family, provide a way to examine problems such as illness or dysfunction, intergenerational transmission of triangles, resources of the family, patterns for example gender and sibling functioning or genetic patterns, life cycle changes, events that might be important such as loss or traumas from previous

generations. Since genograms scan past generations historically and assess the current relationships in the larger context through previous life cycle transitions, clinicians or researchers can make tentative hypotheses to assess the family patterns of relationships and functioning. When family members were asked rules, worldviews, beliefs, main themes, priorities, and also important issues that previous generations had experiences, it gives information about the repetitive patterns valid for the family. So, through the genogram, the connection between the present and the past family members can be assessed. The genogram the spouses in the marital system was first drawn on a large white sheet of paper and then transferred to the computer in Genopro. The genogram of each couple is given in Appendix D along with some basic information regarding their families. At this point, the above titles in each genogram represent the participants' answers to the question that 'what would you say if you need to describe these three generations of family in one world'. (See Appendix D)

2.3 Sampling and Participants

13 married couples were recruited from social media particularly via Instagram and Facebook. The social media announcement text (See Appendix F) was shared on Instagram and Facebook and through the snowball sampling, a couple of suitable participants were recruited. The network of both the participants and the researcher provided some other married voluntary childless couples. When the researchers think 'theoretical saturation' is occurred, the recruitment process is ended (Glaser & Strauss, 1967, p.61). While sampling in quantitative research focuses on generalization to populations, sampling in qualitative research emphasis on analytic generalization (Sandelowski, 1995). In this way, the study uses purposeful and theoretical sampling methods based on the specific criteria that were determined in advance. To contribute to the evolving theory of the role of intergenerational transmission on couples' decision making-process, couples who met certain criteria were recruited to participate in the study: (1) couples should be at least 18 years of age; (2) couples should be legally married; (3) they declare that they do not want to have children; (4) each spouse declare that they do not have any known fertility problem; and (5) each spouse did not experience any childbearing or childrearing from previous relationships.

The reason why this study is interested in only married couples is that social norms and expectations of childrearing and childbearing experiences on married couples are different from the experiences of cohabiting couples (Corin, Liefbroer, & Gierveld, 1996; Heaton, et al., 1999). Similarly, since the experiences of married couples who have fertility problems are different from the married couples who voluntarily choose not to have children (Matthews & Matthews, 1986), it is required that they do not have any known fertility problems. Although in the literature it is argued that couples should be married at least 5 years to have enough shared experiences of being childless (Mawson, 2005), however, in this study the sampling population consisted of mostly new married couples less than 5 years except for two couples whom they are married over than 5 years. It is believed that the idea is investigating the role of intergenerational transmission on the decision-making process of newly married couples gives also rich information since most of the couples are in a relationship with each other over 5 years or they stated that they are active deciders which means they do not want to have children as long as they know themselves. Thus, two married couples less than 1 year were also recruited to the current study since both woman participants in each couple stated that they had never been wanted a child since teenager years and it is known that when one participant is decisive on being voluntary childless the other partner moves through this edge of the decision since the decision making is a dyadic process and they influence each other (Hee Lee, 2011). Also, one couple has known each other for 8 years, although other couple known each other for 2 years, they are in the middle-age years. However, the very first married couple was excluded from the study since in the middle of the meeting they have revealed that they actually do not want to give birth to a child but want to adopt a child and already applied to authorized institutions few months ago. This incidence might show that the concept of 'not wanting to have children' may be conceptualized as 'choosing not to give birth to a child' for some people.

If we look at the demographic profiles of the couples involved; 10 couples are from different cities in Turkey (4 from Istanbul, 4 from Ankara and 2 from Izmir) while 3 couples are living abroad (1 from Vienna, 2 from London). Female participants' ages range from 26 to 42 (M = 31.7, SD = 4.8) and male participants' ages range from 28 to 40 years old (M =32.5, SD = 4.3). While one couple has been

married for only 2 weeks, and the other one has been married for 4 months, other participants have been married for at least a year (*M* = 3.3, *SD* = 2.9). Moreover, the average duration of the relationship is 8 years. When we look at the education status, it is seen that all the participants have at least an undergraduate degree. While 3 men and 3 women have master's degree and 2 women and 1 man are doing master, 9 men and 8 women have bachelor's degree. Moreover, while all men and 10 women participants are employed, 3 women participants are unemployed and looking for a job. The household income level for a month varies between 4.500- 50 thousand TL. In terms of physical health, except for one male participant, there is not any serious physical illness reported. In terms of psychological health, one female participant had received psychotherapy for a year and two other participants (one male and one female) participants received antidepressant medication for a certain period, but they do not use it anymore, other participants stated that they had no psychological disturbances requiring treatment. 9 of men and 8 of women describe themselves as atheist on the other hand, one woman is deist and 4 of women and men identified themselves as Muslim. Lastly, the nick names were given randomly to the participants. (See Table 1 for detailed socio-demographic characteristics of the participants).

Table 1

Socio-demographic Characteristics of the Participants

Randomized Names	**Gender**	**Age**	**Education Level**	**Monthly Income**	**City of Residence**	**Duration of Marriage**	**Voluntary Childless by**
Family I							
Ayşe	Woman	32	Bachelor	12 thousand TL	Ankara	3,5 years	Choice
Halit	Man	33	Master				Choice
Family II							
Öykü	Woman	29	Bachelor	20 thousand TL	Ankara	3,5 years	Choice
Ahmet	Man	32	Bachelor				Choice

Family III							
Serpil	Woman	32	Bachelor	2500 dollars	Vienna	1,5 years	Choice
Sinan	Man	31	Master				Choice
Family IV							
Kardelen	Woman	37	Bachelor	3,500 Pound	London	10 years	Choice
Miraç	Man	34	Bachelor				Choice
Family V							
Melis	Woman	42	Bachelor	5-8 thousand TL	Izmir	2 weeks	Choice
Murat	Man	39	Bachelor				Circumstance
Family VI							
Begüm	Woman	28	Bachelor	10 thousand TL	Ankara	1,5 years	Choice
Uğur	Man	28	Bachelor				Choice
Family VII							
Dilara	Woman	37	Bachelor	10-12 thousand TL	Istanbul	8 years	Choice
Erdi	Man	37	Bachelor				Choice
FamiliyVIII							
Nilüfer	Woman	29	Master	22 thousand TL	Istanbul	3 years	Choice
Barış	Man	28	Bachelor				Choice
Family IX							
Deniz	Woman	28	Bachelor	4,5 thousand TL	Izmir	3,5 years	Choice
Oğuz	Man	29	Master				Choice

Family X							
Burcu	Woman	26	Bachelor	20 thousand TL	Ankara	3 years	Choice
İsmail	Man	28	Bachelor				Choice
FamilyXI							
Zeynep	Woman	26	Master	15 thousand TL	Istanbul	4 months	Choice
Mert	Man	28	Bachelor				Choice
Family XII							
Banu	Woman	33	Master	20 thousand TL	London	1 year	Choice
Özgün	Man	40	Bachelor				Choice
Family XIII							
Gizem	Woman	33	Bachelor	40-50 thousand TL	Ankara	4,5 years	Choice
Ömer	Man	35	Bachelor				Choice

2.4 Procedure

2.4.1 Pilot Interview

Conducting a successful genogram-focused clinical interview is required certain experience in the applied field (Karakuş & Erkan, 2019). A pilot interview was held to provide a genogram-focused clinical interview experience for the researcher. One unmarried couple who does not want to have children in the future was invited for the pilot study. After the transcript and analyses process, the interview format and questions were not changed but even though they are together for over 10 years and engaged because they are unmarried couples, social norms and expectations are different from married couples, thus they express that they were not subjected to social pressure. Moreover, it allows seeing the suitability of the interview questions and arrange if necessary.

After the ethical permission (See Appendix H) is taken from TED University

Ethical Committee, the data collection process is started. Participants are collected from both different cities in Turkey and Turkish couples living abroad based on the suitability of the objective of the study. To reach participants, social media announcement text (See Appendix F) and verbal notice are used. Before interviews, couples were informed about the purpose of the study, the procedure, sampling criteria, video recording of the interview, and confidentiality. Due to the conditions brought by the pandemic, the semi-structured interviews were held online. Through video chat Zoom interviews, TEDU consent form (See Appendix E) is read out load asked if they approve and whether they have a question to ask for the researcher so that participants are informed about the purpose and procedure of the study, their rights, and confidentiality then if they accept, informed consent are taken from participants verbally. After the consent has been taken from each participant demographic information questions (See Appendix A) are asked. After the demographic information form is taken for each participant, genogram drawing is started with the questions from the pool (Appendix B) is asked simultaneously. The interview is based on semi-structured in-depth interviews so one of the main aims of the study is to understand the experiences of the participants. Since the study based on grounded theory, during the data collection and analyses process, the interviews are evolved as some of the questions from the pool were emitted or the researcher focuses on certain questions (Charmaz, 2006, p.3). Moreover, semi-structured interviews allow the researcher to focus on the desired format at the same time give enough flexibility to change or emphasize certain topics. The interviews lasted approximately 60 to 120 minutes. All interviews were recorded and then transcribed by the researcher and 7 undergraduate research assistants, who had been informed how to transcribe qualitative interviews, and written ethical informed consent about confidentiality were taken from the students.

2.5. Data Analysis

Glaser and Strauss developed a set of principles that can be used to construct a theory that is grounded in data (as cited in According Chamaz, 2006, p.4). In other words, the main aim of the theory is to develop a theory that is suitable to the data (Howitt, 2010, p. 214) The analyses process follows a series of steps. Firstly, the researchers develop familiarity with their data, then they started to code small pieces of their data via screening line by line; then the researcher synthesizes these multiple

small elements into categories and then the researcher continually compare the data with the major categories in the analysis. Lastly, to develop substantive theory, hypotheses were tested on how the basic theory is related with the other things have been researched (Howitt, 2010, p. 206). When the researcher believes that the analyses go no further in terms of category development, saturation occurs. Moreover, theoretical sampling will be assessed from the beginning of data collection and also throughout the process to check the theory with the data and if there is any need for revision. Although it is not certain how the traditional concepts of validity and reliability can apply to grounded theory, for example, respondent validation -the idea that the theory has been built from the data should make sense for the participants- can be used (Howitt, 2010, p. 189).

2.6 Trustworthiness of the current study

Trustworthiness (also called credibility, rigor, and validity) is identified in qualitative research as "where and how the researchers derive their beliefs, assumptions, motivations and ways of working, as about judgement on research procedures and findings reached via the application of specific criteria." (Emden & Sandelowski 1998, p.207). Unlike quantitative research which emphasizes the concept of objectivity, in qualitative research, the analyses process is based on "the subjectivity" (Morrow, 2005). Morse, Barrett, Mayan, Olson, and Spiers' (2002) developed certain general verification criteria to apply for the research process. These qualities are also suitable for grounded theory (Hee Lee, 2011). According to Morse and her colleagues (2002), the first standard is researcher responsiveness which refers to the researcher's sensitivity and flexibility, for example, in the current study when the first married couple stated that they want to adopt a child in the middle of the interview, the researcher who made the interview continued the interview asking their experiences, she was kind and warm to their understanding. One of the advantages of grounded theory is that the level of flexibility lies in the method (Charmaz, 2006, p.178). At this point, the method is open to change by emphasizing the emergent processes, data analyses start with the first interview and continue throughout this process. Secondly, methodological coherence refers to "congruence between the research question and the component of the method (Morse et al., 2002) such as choosing a grounded theory to study processes and in areas with little research. Thirdly, saturation occurs when the researcher thinks that the data starts to repeat

themselves so stops collecting further data (Hee Lee, 2011). In the data collection process of this study, theoretical sampling was not fully applied because of the difficulty to find the required sample. Theoretical thinking and theory development were developed by the researcher based on her analytic thinking. According to Morse and her colleagues (2002), theoretical thinking needs a researcher to have macro-micro perspectives, requires constant comparison, checking, and rechecking the data. Lastly, theory development occurs when the researcher deeply thinks about the relationship between the micro perspective of the data and the conceptualization as a macro perspective.

2.7 Reflexivity

Reflexivity is identified the self-appraisal of the researcher which means being conscious of the own situatedness in the research process; how this relatedness influence people being studied, the questions being asked, how the data is gathered and how interpretation is made (Berger, 2013). At this point, it is known that the researcher's background, personal experiences, worldviews, attitudes might affect the whole research process. When we look at reflexivity in grounded theory, the method gives importance to the research process, which is fluid, interactive, and open-ended (Charmaz, 2006, p. 178). At this point, researchers are not separated individuals from what they study instead they are a part of the whole process. Thus, the researcher's journey of grounded theory based on the interaction between the researcher and the data, which is a changing process, is emerged by beliefs, attributions, and opinions of the researcher and developed by the relationship with the one's discipline and the substantive field (p. 179).

"I am Buket Baykal, 27 years old woman. I defined myself as a voluntary childless woman for a couple of years. I am an active decider as I have never remembered myself dreaming that I would have a child one day. When I graduated from the psychology department at METU, I decided to study gender and women studies since I wanted to be more academically informed in this field. Through the years in master, the mandatory motherhood got my interest, and I witnessed how there are stereotypes, prejudices, and discriminations on women who choose a different path other than motherhood not only in their social life but also in social policies or labor force participation. When I started to study at TED University, thanks to family therapy

and family systems classes, I feel so close to Bowen's family system theory and especially seeing through the intergenerational transmission, we repeat or change patterns over generations unconsciously or consciously.

I have a lot of motives to be a childfree woman, I define myself as a person who is open to experiences in life, I want to do a lot of things in life and I love my freedom, autonomy, do what I want to do when I want to do. Apart from my personality characteristics and priorities, the idea that having a child in this world makes me scare because of terrorism, climate change, violence against minorities, and accessibility to safe food. In addition to the general worries that I have, having a child in Turkey also adds to the list because of many disadvantages. Apart from both these personal and societal reasons, I was also thinking about the role of intergenerational transmission on the decision of being voluntary childless especially when I was reading the book -It Didn't Start With You- and when I encountered a documentary -Lunadigas- about the informal interviews with voluntary childless Italian women.

I define myself as a bit perfectionist person, I know that I can be a good parent if I want to, but also know that to be a good parent, I would do so many sacrifices perhaps forget my other interest and focus on the child so that he/she grows up well. However, I know that believing something sometimes does not enough to act accordingly, there might be emotional bonding especially with the parent we don't feel so close, we can sometimes repeat patterns that we do not want to, for example, I am against violence or any kind of neglectful or authoritative parenting styles, but I might see myself doing that kind of behaviors I don't want to do. Moreover, I learned some basic values from my parents that I think affects this decision, such as the importance of freedom especially my mother always say that "You are an individual who can decide what you want to do in your life, you are free to choose, and I will support you for no matter." Then she continues "I wish I was free too". I think this intergenerational transmission of value is important to develop skeptical thinking and decide what you want to do in your life.

I believe that during the semi-structured interviews, being a voluntary childless woman helps me since I could emphasize what participants can feel or experience. Most of the time, I often felt that I understood them so much and that I shared similar

feelings. I think this perspective provides me to develop rapport with them and to form and ask relevant questions.”

CHAPTER 3

RESULTS

Three major categories have emerged as a result grounded theory analyses of the role of intergenerational transmission on the decision-making process of voluntary childlessness. According to that, these major categories are (1) family factors as a source of repetitive scenarios, (2) intergenerational discontinuity: Breaking the social norm of child-centered living as changed scenarios and, (3) having a child in the modern world is a decision that needs serious consideration, (see table 1 for main categories and subcategories).

Table 2

Grounded Theory of the Role of Intergenerational Transmission on the Decision-making Process: Main Categories and Subcategories

Theme I	**Family Factors as a Source of Repetitive Scenarios**
A	Physical Illness
B	The anxiety of intergenerational transmission
C	Anxiety/ Panic Issues
D	The intergenerational triangles
E	Parentification Experience
Theme II	**Intergenerational Discontinuity: Breaking the Social Norm of Child-Centered Living as Changed Scenarios**
A	The road is predetermined, you get married and have a child
B	It is the child that makes a family a family
C	Putting your own life on the back burner
Theme III	**Having a child in the Modern World is a Decision that Needs Serious Consideration**
A	Changing the concept of the value of child
B	Changing the understanding of parenting greatly increases perceived responsibility
C	Basic values as family priorities; freedom, standing on one's own feet, making own decisions

1) Family factors as a source of repetitive scenarios

The first theme is the role of intergenerational transmission of family factors as a source of repetitive scenarios in the decision-making process of voluntary childlessness of married couples. These factors are respectively physical illness, the anxiety of the intergenerational transmission, anxiety and panic issues, basic values/ priorities, and parentification experience. First, one participant talked about the transmission of physical illness first to second and third generation. Since there is an intergenerational transmission of cardiovascular disease from Murat's ancestors to the third generation, he was so afraid of leaving his child and wife behind, so having a heart disease became one of the main reasons that he does not want to have a child, he explains that:

> "I had a heart attack at a young age, I had it 5 times, 6 stents were inserted, finally, bypass was performed in June. So, we have something based on the heart. My grandfather had a heart attack. My grandmother also had a problem with the heart again, and her heart was no longer beating. My father has a bypass surgery in 2009."
>
> *"Kalp krizi geçirdim, genç yaşta beş sefer geçirdim, 6 tane stent takıldı, en sonunda haziran ayında bypass yapıldı. Yani, kalbe dayalı bir şeyimiz var. Büyük babam kalp krizi geçirdi. Babaannem ise onda da yine kalple ilgili bir sıkıntı vardı artık kalp ritim atmıyordu. Babam 2009 bypasslı."*
>
> "When we were just starting to talk to Melis for the first time, I always wanted child, Melis's ideas were different but this especially in the last year and a half, when my health problems made me very tired, I was neither thinking of marriage, nor a child, after all, in a year and a half it's a self-recurrent critical illness and when will I get out of this spiral?, and if I survive, will I survive? or die and get rid of it? The child is a greater responsibility, he needs you. He needs both a mother and a father. At this point, I started to think about 'Yes, we have a child, I started to think about whether I will let him down tomorrow? What will happen? After all, my current wife Melis has responsibilities."
>
> *"Melis'le ilk konuşmaya yeni başlayacağımız zaman ben hep istiyordum. Melis'in fikirleri daha farklıydı fakat bu özellikle son bir buçuk yıl içerisinde benim sağlıkla alakalı sıkıntılarım beni çok yorunca ben evliliği düşünmüyordum açıkçası çocuğu da aynı şekilde sonuçta sürekli bir senede bir buçuk senede kendi kendini tekrarlayan kritik bir hastalık ve ne zaman bu sarmaldan kurtulacağım? Kurtulursam da yaşayarak mı kurtulacağım? Ölüp de mi kurtulacağım? Çocuk daha büyük bir sorumluluk onun sana ihtiyacı var. Hem anneye hem babaya ihtiyacı var. Bu noktada ben şeyi düşünmeye*

başladım 'Evet bizim çocuğumuz oldu ben onu yarın yarı yolda bırakır mıyım? düşünmeye başladım. Ne olacak? Yani sonuçta mevcut eşim Melis çalışıyor, sorumlulukları var."

" Health is seriously the main point for me, otherwise the child is very beautiful. And this is not a decision to be made alone. The issue I mentioned at the beginning about health creates great concerns for me, I don't want a mother - who does not want a child- to say that 'He went and left me with this child, and I am alone.'".

"Sağlık ciddi anlamda benim için temel noktadır yani yoksa çocuk çok güzel. Bir de bu tek başına alınacak bir karar da değil sonuçta. Sağlıkla alakalı o başta bahsettiğim konu bende çok büyük kaygılar yaratıyor yarın çocuk istemiyorum diyen bir anneye 'Yaptı da bak gitti beni bu çocukla bıraktı, bir başıma kaldım.' desin istemiyorum."

Secondly, one participant talked about the anxiety of intergenerational transmission. She expressed that she has anxiety about the possibility of a child who is born with genetic disorders such as mental retardation or predisposition like aggression. For instance, Banu expressed that:

"There is also a risk, for example, you gave birth to a child, you raised him, you provide him the best schools, you taught the best books, you taught foreign languages, you raised him as a human being who can speak everything from philosophy to anything else, but for example, passive-aggressive genetically, he has a nervous breakdown and he goes somewhere, he stabs someone or something, or he becomes an AKP voter or something, you know, fifty percent hereditary, fifty percent environmental, the risks that will arise due to things that are not under your control are a cause of great concern for me. I think it's a very big risk. I have told too many pregnant friends, for example, a child may be born mentally retarded. How can you be sure?"

"Şöyle bir risk de var mesela sen çocuğu doğurdun, yetiştirdin, çok güzel en iyi okullara götürdün, işte en iyi kitapları okuttun, yabancı dil öğrettin, işte felsefeden başka bir şeye kadar her şeyi konuşabilen bir insan evladı olarak yetiştirdin sen onu ama mesela pasif agresif genetik olarak bir sinir sıkıntısı var ve gidiyor bir yerde birini bıçaklıyor falan ya da AKP seçmeni oluyor falan hani yüzde elli kalıtsal yüzde elli çevresel ya, senin kontrolünde olmayan şeylerden dolayı oluşacak riskler benim için çok büyük bir kaygı sebebi. Bence çok büyük bir risk ben çok fazla hamile arkadaşıma söyledim yani nasıl emin olabiliyorsun? Yani mesela ya şey yani çapsız doğdu, kapasitesi düşük."

Thirdly, the possibility of intergenerational transmission of anxiety is another family factor during the decision-making process. Some participants mentioned their grandparents and/or parents' anxious personality traits. It is showed that those participants whose ancestors show anxious personality characteristics express their worries about the child's future/ the uncertainty of future and/or the idea that the world

is going to a bad place, the things that they cannot control. For example, Öykü says: "I have taken antidepressants for years, but neither of us is currently using them. I used it for 10 years. When the researcher asked: "What you think was the reason you started? The participant said: "It was my hopelessness about the future in general, though it continues. I don't need it now because I got used to it, so I got over the initial shock." Then she talks about the anxiety issues of her parent's and grandparent:

> "Currently, my mother is also actively using antidepressants. By the way, she had started years ago because she was a very anxious person. I was in primary school, and she still uses it. My father also used it for a while because of living with my mother, he started to look like her. But now he does not use it and stubbornly continues not to use it, but I think he should use it. My grandmother was very much like my mother. Worse still, she was like a constant calamity, she used to call and tell the bad news in the newspaper or something, I think she should have used it too, but she died. My grandmother was like this, she was in a panic about the safety of her children. Like always protecting them, you know, as my mother did to me, you know, she has always been a worried woman."
>
> *"Benim annem de şu an aktif bir şekilde kullanıyor. Bu arada o da yıllar önce çok anksiyeteli bir insan olduğu için başlamıştı. Ben ilk okuldaydım ve hala kullanıyor. Babam da bir dönem kullandı çünkü annemle yaşaya yaşaya o da ona benzemeye başladı ama şu anda kullanmıyor ve inatla kullanmamaya devam ediyor ama bence kullanması lazım. Anneannem de çok annem gibi biriydi. Daha da fena, sürekli felaket tellalı gibiydi gazeteye çıkan kötü haberleri arayıp söylerdi falan öyle. Bence onun da kullanması gerekiyordu ama öldü. Benim anneannem şöyleymiş çocuklarının can güvenliği ile ilgili panik halindeymiş. Sürekli onları koruma halinde hani annemin bana yaptığı gibi hani hep evhamlı bir kadınmış."*

When the researcher asked about the childhood and adolescent years, she said:

> "They had designed a peaceful life in a lantern for me, I lived it, it was very nice, I was not aware of any evil and had no responsibility. All my duties were taken care of by my mother and father… From the moment I had a boyfriend, I started to feel uncomfortable. They interfered too much, like deciding when and where to meet him".
>
> *"Bana fanusun içinde huzurlu bir hayat dizayn etmişler onu yaşamışım çok güzeldi. Hani hiçbir kötülükten haberim yoktu ve hiçbir sorumluluğu yoktu. Benim bütün işlerim annem ve babam tarafından halledilirdi… Erkek arkadaşım olduğu andan itibaren rahatsızlık duymaya başladım çok fazla müdahale etmeleri onunla nerede ne zaman buluşacağını karar vermeleri falan beni çok sinirlendiriyordu."*

When the researcher asked the motivations behind the voluntary childlessness, she says; "The most important reason for me to make this decision is 'Will I raise a

happy person with a future? Concern about raising a bright future person…" Similarly, her husband Ahmet talked about similar anxieties about the uncertainty of the future and the worries about the child's future:

> "Actually, I'm not afraid of momentary things at all, my fear of having a child stemmed from those concerns about the future. You know when she cries or whines a year or two, they are not things I think about much. Somehow, you get sleep deprived, you sacrifice your comfort. I don't know, because I can't anticipate the things of raising a human, so I frown on it. Whether or not I can offer him a good life, whether he can be a happy person or not. How happy he can be in Turkey? How stable a future he can have?"
>
> *"Aslında ben anlık şeylerden hiç korkmuyorum. Benim çocuk sahibi olmaktaki korkum gelecek ile ilgili o kaygılardan kaynaklandı. Hani o ağlasın sızlasın bir iki sene onlar benim çok düşündüğüm şeyler değil. Bir şekilde uykusuz kalırsın, konforundan fedakârlık yaparsın. Ne bileyim bir insan yetiştirmenin şeylerini kestiremediğim için o yüzden ben soğuk bakarım hani. Ona iyi bir hayat sunup sunamamak, mutlu bir insan olup olamayacağı. Türkiye şartlarında ne kadar mutlu olabilir? Ne kadar sağlam bir geleceği olabilir?"*
>
> "My mother and father also use antidepressants. Is it considered a disorder? Maybe. It has become normalized because everyone uses them today. No one had many more serious problems. My mother is a little more panicked, you know a little bit apprehensive. Usually, these are the reasons for their usage".
>
> *"Annem ve babam da antidepresan kullanıyorlar. Bir rahatsızlık oluyor mu? Sayılıyordur belki. Günümüzde hani herkes bunları kullandığı için normalleşti. Çok ciddi problemler yaşayanlar olmadı hani annem biraz daha panik, hani biraz evhamlı. Genellikle kullanım sebepleri bu sebepten."*

These examples show parental' anxiety and general attitudes towards life challenges may affect the next generations' attitudes toward how they perceive the future and the uncertainty. Another participant Melis, also talked about her mother's anxiety issues and experiences similar concerns and the state of apprehension, specifically she thinks that the world is going to a bad place, and she thinks that she would be so anxious about her child's future all the time. She said:

> "I always thought that my mother got married at a very young age at the age of 20 and gave birth to me at the age of 21, I think she had a traumatic situation after the divorce, but I know that she is a very strong woman, she did not receive therapy or medication for this, but in the following years, I think this situation manifested in her different ways. For example, my mother had restless legs syndrome and struggled with it for many years. She regulated it right now by using drugs etc. But then there was always a state of panic, and she has been using Lustral for many years, for example, she says it is the only thing that relieves her giving by her doctor. I think it is a psychological effect of getting old, it is like an apprehension. She wants nothing to happen to anyone. She has

the fear that she will die, her mother's death at the age of 63-64 something that increased her anxiety as she approached that age for example, she has problems with it, she uses lustral and currently, it is good for her."

"Ben hep düşünmüşümdür şimdi çok genç yaşta bir evlilik 20 yaşında evlenmiş ve 21 yaşında beni doğurmuş, boşanmadan sonra travmatik bir durumu oldu bence ama çok güçlü bir kadın olduğunu biliyorum bunun için bir terapi, ilaç tedavisi görmedi ama sonraki yıllarda bence o bunda farklı şekillerde ortaya çıktı. Mesela huzursuz bacak sendromu vardı annemin, çok uzun yıllar bununla mücadele etti. Bununla ilgili artık ilaç vs kullanarak düzene soktu ama sonrasında hep bir evham, bir panik bir durumu oldu ve uzun yıllardır da Lustral kullanıyor mesela doktorunun verdiği bir tek onu rahatlatan şey o. Yaşlanmaya başlamanın verdiği bir psikolojik etki olduğunu düşünüyorum, böyle bir evham kimseye bir şey olmasın. Ölecek miyim korkusu, annesinin 63 64 yaşında ölmesi onun o yaşa yaklaştıkça evhamını daha çoğaltan bir şey oldu mesela, bununla ilgili sıkıntıları var Lustral kullanıyor o da ona iyi geliyor açıkçası."

"I think the world has gotten much worse for a very long time. Maybe this word will sound very cliché to you, we are saying something like whether we will have a child in this world, but when I look at it, I am the one who is always worried about my child's future. What will happen to my child's future? I think I will experience to question the thought of if my child goes out, will he come back or not, Will this or that happen? In my opinion, 20 years ago, there was a slightly better situation and environment. Now that nuance I talked about has been added, I think the current time is very difficult and worse for raising a child. Both materially and spiritually..."

"Çok uzun zamandır dünyanın çok daha fazla kötüye gittiğini düşünüyorum. Belki bu laf size çok klişe gelecek şöyle bir şey söylüyoruz ya bu dünyaya çocuk bu doğuracağız diye ama yok gerçekten baktığımda eli devamlı kalbinde evhamlı olan benim. Çocuğumun geleceği ne olacak? benim çocuğum çıktı gelecek mi diye şu mu olacak bu mu olacak düşüncesini bu dönemde daha çok yaşarmışım çünkü 20 yıl önce bundan biraz daha iyi durum ve ortam vardı bana göre. Şimdi o nüans dediğim bu üzerine eklendi daha kötü bir zamanda çocuk yetiştirmek şu anki zaman için bence çok zor yani. Hem maddi hem manevi…"

The future anxiety that these participants experienced might be inherited from the first and/or second generation to the third generation. Moreover, living in Turkey (in terms of living standards about educational, political, social, economic), and the general negative societal situations in the world (like terrorism, violence against woman, climate change, difficulty to access healthy food) also were highlighted by these participants both as an anxiety/ a cause of stress and as reasons not to bring the child in this world. For example, Dilara expressed the main motivation to be voluntary childless as "Nothing in the world goes perfectly. After I die, that child would haveto

stay alone and fight for something. There will be thirst, there will be drought, epidemic diseases, earthquakes, these are… So, I don't want to create an extra source of anxiety for myself". Since her mother is a very anxious and apprehensive person while she was growing up as she told "Unbelievably protective and restrictive and not allowing us to go out on the street, here you go, you will come at this time, you will come at 5, 1 past 5, a woman who screamed in the streets was looking for us". So, there may be the role of intergenerational transmission of anxiety that increases the belief of the world is going to a bad place.

Fourthly, there may be also intergenerational triangles. Triangles are in the form of repetitive relational patterns that one's functioning depends on the other two. If this relational pattern transmits over the generations, this would intergenerational transmission of triangles. For example, one participant stated that he has anxiety of intergenerational transmission of showing similar patterns of parenting attitudes like his father. He has a concern about not being able to meet the emotional and psychological needs of the child since he questions how well he has received during his childhood and adolescence. When the researcher asked: "Do you think that what you have observed or experienced in your family may have played a role in making this decision?", Ahmet answers:

> "Of course, we have as well. I do not know what to say specifically, but there are some sure, for example, the first thing that comes to my mind is: Will I be able to satisfy him emotionally? Will I able to support him? Will I be able to meet his emotional needs? Human is an emotional creature; Will I be able to meet these expectations? How well was I received? How well I received in my childhood and adolescence? Of course, there are such questions in my mind, maybe minor 10% is 15%."
>
> *"Bizde de tabi ki vardır. Spesifik ne söyleyebilirim bilmiyorum ama mutlaka vardır mesela benim ilk aklıma gelen duygusal olarak onu besleyebilecek miyim? Yanında yer alabilecek miyim? Duygusal ihtiyaçlarını karşılayabilecek miyim? İnsan duygusal bir canlı; bu beklentilerini karşılayabilecek miyim? Benim de ne kadar karşılandı? Benim çocukluğumda ergenliğimde ne kadar karşılandı? Tabi ki bu tip sorular kafamda olur vardır belki az %10 %15tir."*

He first expressed the distant relationship between his grandfather and his father then talked about the similar relationship pattern with his own father. For example:

> “I don't think people think about the concept of a family in the past. For example, my grandfather did not sit at the same table with his children, he ate his food separately. How strange is that, right? Or, for example, when my father saw his father on the street, he would change his way. He was afraid of him; they were afraid of him. They don’t show their love. What kind of family concept do we have from here now?”
>
> *“İnsanların bir aile kavramı üzerine düşündüğünü düşünmüyorum. Mesela, benim dedem çocukları ile aynı sofrada oturmaz yemeğini ayrı yermiş. Ne kadar garip bir durum değil mi? Ya da mesela babamlar babasını sokakta gördükleri zaman hani yollarını değiştirirlermiş. Hani korkarlarmış ondan çekinirlermiş hani, biz şimdi buradan nasıl bir aile kavramı hani yok ki."*
>
> “Every child receives love from his mother and father. We certainly received it, but it was not that exaggerated. Our relationship with my mother is not broken, my relationship with my father is broken. I don’t know, my father wasn't a very expressive person. He was not with me much while I was solving my problems, so our relationship is not that good. It is not warm. I usually try to solve my problems by myself, and if I cannot, I try to solve them with my mother. My father has usually been further out of that thing.”
>
> *“Hani her çocuk annesinden babasından sevgi görür. Yani biz de gördük mutlaka ama o kadar abartılı değildi. Annemle olan ilişkimiz aslında kopuk değildir, babanla olan ilişkim kopuk. Bilmiyorum babam sevgisini çok belli edebilen bir insan değildi. Problemlerimi çözerken de çok yanımda olmadı, dolayısıyla ilişkilerimiz çok şey değildir. Sıcak değildir. Hani genellikle problemlerimi kendim çözmeyi çözemiyorsan annemle çözmeyi denerim. Babam genellikle o şeyin daha dışında olmuştur.”*

Another example for intergenerational triangulation was given by Kardelen. First, she talked about the emotional relationship with her parents:

> “I don’t remember a very close relationship with both my father and mother in no period. Even if I had lived, I don't remember when I was a child. I don't have a very good relationship with my father anyway, we don't get along very well. It is an ongoing thing, you know, not because of such a big problem, but I can't get along with him. Yes, there is a very strong bond between me and my mother, we love each other very much, we both always support each other, but not like an indispensable mother-daughter relationship in life.”
>
> “*Benim annemle de babamla da çok yakın ilişkilerim hiçbir dönemimde baktığımda hatırlamıyorum. Yaşadıysam da hani çocukluğumda hatırlamıyorum yani. Babamla zaten hani çok iyi bir ilişkim yok çok iyi anlaşamıyoruz. Süregelen bir şey bu hani öyle çok büyük bir sorundan şeyden dolayı değil ama anlaşamıyoruz kendisiyle. Annemle evet aramızda çok kuvvetli bir bağ var, birbirimizi çok seviyoruz, her zaman birbirimize destek oluyoruz ama böyle hayatta olmazsa olmaz bir anne kız ilişkimiz yok.”*

Then she talked about the similar emotional relationship pattern between the first and second generations:

"They always say that my grandmother was a very loving person and raised all 9 children without scolding or raising a hand even once. My grandfather is not like that. You know, he's not such a bad person, but he's not very affectionate like 'oh my child, my dear'. When you look at the conditions of those times, he is even considered normal compared to the average of Turkey, as my mothers and aunts say, maybe he is not such a conscious father. My mother also has a nice feeling that her mother and siblings treat her well, so she named me Kardelen anyway, but she doesn't have such a good relationship with her father too, not only because of his attitudes to herself but also to her siblings."

"Anneannemin çok sevgi dolu bir insanmış, 9 çocuğunu da bir kere bile azarlamadan ve el kaldırmadan büyüttüğünü her zaman söylerler. Dedem öyle değil. Hani böyle kötü bir insan değil de çok sevecen 'aman yavrum çocuğum' öyle bir adam değil yani. O zamanların şartlarına baktığınızda Türkiye ortalamasına göre normal bile sayılıyor belki öyle bilinçli bir baba değil yani annemler ve teyzemler öyle anlatıyor. Annemin de hissettiği annesini ve kardeşlerinin ona iyi davrandığına dair güzel bir his var benim ismimi de o yüzden zaten Kardelen koymuş ama babayla onun da öyle güzel bir ilişkisi yok babasına dair sadece kendine değil kardeşlerine de tutumundan dolayı güzel bir ilişkisi yok."

"If we come to my father's side, my father actually doesn't have a good relationship with his father too, but he has a good relationship with his mother, which he remembers when he was a child and tells it very well, and also with his grandmother because my father has been grown up with those two mothers, his mother and grandmother took care of him together, raised him with great care. My father calls his grandmother a mother, even he has a good relationship with his mother, he doesn't have a very good relationship with his father, that's what I remember."

"Babamın tarafına gelirsek babamın aslında kendi babasıyla onun da güzel bir ilişkisi yok ama annesiyle güzel bir ilişkisi var çocukluğunda hatırladığı ve çok güzel anlattığı ve kendi anneannesiyle çünkü babam o iki anne ile büyümüş gibi olmuş ona kendi annesi ve anneannesi birlikte bakmışlar, çok el üzerinde tutarak büyütmüşler. Anneannesine anne der hatta anne tarafıyla güzel bir ilişkisi var baba tarafıyla çok da güzel bir ilişkisi yok hatırladığım bu yani."

When we look at how this intergenerational triangle relationship pattern might have a role during the decision-making process for the case of Kardelen for instance, she said: "My father does not have a sense of responsibility towards not only his children but also towards the world. I wish we would be like that." And she also thinks that "I can easily say that they are not people who are very conscious parents and devote their lives to child education, I see it as something they try to do with what they know and their own truth. I don't even see it that much for my father". She thinks that having a child is a serious responsibility in terms of parenting, "I think it's a big responsibility to take it under, I don't think it's necessary and It is really difficult for

people who have children to take that responsibility, so I have no idea how they deal with it."

Deniz talked about a triangulation which is taken place with her mother, her brother, and herself. This kind of triangular relationship may show patriarchal gender arrangements since sons are favored over daughters, while parent's attitudes towards sons' life choices are supported and regarded as logical, daughters are supported conditionally, their life decisions are regarded as illogical because of gender attitudes. First, she expressed her emotional relationship with her mother and how her mother had favored her son over her daughter:

> "When I was little, I was a street kid who played a lot, went out a lot. Our relationship with my mother wasn't very good because she was overworked and stressed a lot. It wasn't very good especially when I was a kid. In the cities we live in, I had many problems with the perception of the girl both during childhood and adolescence period… My brother was a more adaptable and calmer child, so when I came after him, it was a big shock for my mother. She always says that I didn't try so hard to raise Kenan, but I tried so hard with you. She couldn't get along very well with me. I couldn't get along well with her either. She even said the obvious that she loved my brother more, or she says that she did not love me sometimes. So, I can say that it always went bad. I always remember the bad part. The last time we lived together when I was in college. You know, we had a separate semester in high school. It was a very bad time then. In other words, there was no shortage of shouting and shouting at home at that time, as we could not always agree on anything. I think many of my features are similar to her, but maybe from that or maybe from something else, we don't get along much… She accepts the decision of my brother as very logical, very right, when it is for me, she says 'I think it is very unreasonable, that you should never do such a thing.' She still does not find any of the paths I've chosen like career points as logical."
>
> *"Çok fazla oyun oynayan, çok fazla dışarı çıkan, tam bir sokak çocuğuydum küçükken Annem fazla çalıştığı için ve çok fazla stresli olduğu için onla ilişkimiz çok fazla iyi değildi. Özellikle çocukluğumda çok iyi değildi. Biraz da yaşadığımız şehirler de hem çocukluk hem de bu ergenlik döneminde yaşadığım şehirlerdeki kız çocuğu algısıyla ilgili çok problemler yaşadım…Abim daha uyumlu ve sakin bir çocukmuş o yüzden ondan sonra ben gelince annem için büyük bir şok olmuş. Onu hep söyler Kenan'ı büyütürken hiç uğraşmadım ama senle çok uğraştım diye. Benimle çok anlaşamazdı. Ben de onla çok anlaşamazdım. Hatta açık açık şeyi söylerdi. Abimi daha çok sevdiğini söylerdi ya da bazı dönemlerde beni sevmediğini de söylerdi. Yani hep kötü gitti diyebilirim. Ben hep kötü kısmını hatırlıyorum. En son ben üniversitedeyken yaşadık. Hani lisede ayrı dönemimiz oldu. O dönem de çok kötüydü. Yani o dönem de evde hiç bağrış çağrış eksik olmazdı sürekli anlaşamadığımız için her konuda. Birçok özelliğim galiba ona benziyor ama belki de ondan belki de başka bir şey pek anlaşamıyoruz biz." … Abimin verdiği kararı çok mantıklı, çok doğru diye kabul edip bende çok mantıksız, asla böyle bir şey*

yapmamalısın diye. Hala şu anda benim seçtiğim yolları, kariyer noktalarını filan hiçbirini mantıklı bulmuyordur."

Then she talked about a similar favoring relationship pattern with her mother and her grandmother:

> "My mother is actually the eldest child, but it's probably related to that, during her childhood, she is the one who was given a lot of responsibility with her siblings. Also, since she was a bit naughtier and more extroverted child, she was not the kind of child my grandmother liked very much. She also actually had a lot of problems with his mother. Since her father was a long-distance driver, he was not coming home much. It's very rare. When he came, it was very important for them. He comes with gifts, that everything would be great when he arrives. She said she didn't get along very well with her mother. Also, they're four siblings. There was only one boy. There is a state of extreme love and flattery, which is much more common in the Southeast, and also generally in Turkey. My mother and his age are very close. I guess while grandmother was protecting him, she was treating my mother a bit worse."

> *"Annem en büyük çocuk aslında ama büyük ihtimalle en büyük çocuk olmasının verdiği şeyle birlikte ona çok fazla sorumluluk yüklenmiş çocukluğunda kardeşleriyle ilgili. Bir de biraz daha yaramaz ve dışadönük bir çocuk olduğu için de anneannemin çok böyle hoşuna giden bir çocuk değilmiş aslında. Çok problem yaşamış aslında o da annesiyle ilgili. Babası uzun yol şoförü olduğu için eve pek fazla gelmiyormuş. Çok nadir geliyormuş. Geldiğinde de babasının gelmesi onlar için çok önemli oluyormuş. Hediyelerle gelir, geldiğinde her şey çok güzel olurdu diye. Annesiyle çok anlaşamadığını söylerdi. Bir de şey onlar dört kardeşler. Tek bir erkek çocuğu var. O erkek çocuğu böyle yine genelde Türkiye'de olan Güneydoğu'da çok daha fazla olan aşırı derecede sevme durumu ve böyle pohpohlama durumu var. Annemle yaşları birbirine çok yakın. Onu daha böyle koruyup kollarken anneme birazcık daha kötü davranıyorlarmış herhalde."*

The above example shows us how there may be triangulation transmitted over generations, even though how Deniz's mother was upset about this experience, if this kind of pattern were not worked to change it, alliances and conflicts can be repeated through generations. Deniz is aware of this intergenerational transmission, and when the researcher asked 'What do you think might be as a role factor for this decision' she expressed how it influenced her to be voluntary childless:

> "In general, the problems in my childhood that I have already experienced and not having a good relationship with my mother influence. My grandmother also had favored one child over another a lot and she said that she was very upset about that when she was a kid. She actually did the same."

"Genel olarak zaten kendi yaşadığım çocukluğumdaki problemler, annemle olan ilişkimin çok iyi olmaması etkiliyor. Anneannem de çok çocuk ayırıyormuş ve onunla ilgili çok üzüldüğünü böyle söylerdi çocukluğunda. O da aynı şekilde yaptı aslında."

Lastly, some participants talked about the parentification experience. It is known that parentification takes place in the form of role changes between children and parents such as children were treated and expected to behave like an adult in the form of either emotional and/or instrumental parentification. It is important to know these forms of parentification are also likely to take place simultaneously. For example, Begüm's feeling high concern for the emotional needs of her brother's well-being and mood can be an example of emotional parentification. She was feeling as if she is the parent of her brother, she said that "I mean, if my brother's current unhappiness makes me so sad, I can't even imagine how my own child's unhappiness will make me sad."

"I think I took being an older sister very seriously, I think it was always like that. Maybe I haven't changed his diapers since he was very young, I didn't feed him, etc. But I took the responsibility of him too much, yes, it may have been effective for this decision. It was a little scary for me to undertake the responsibility of my brother so much, I mean, he has a mother and father, they are both very responsive anyway, why did I take that responsibility and make him such a burden to myself… I realized that I feel so responsible that I feel like I should do everything for my brother to his success and happiness. I mean, why did I take so much responsibility when my brother already had his mother and father, then I said to myself what would I do if I had my own child, this is not even my child, my brother. I thought that when I embraced this so much and thought about everything so much, I must be crazy for my child. Also, this might have worked. My brother and I later moved to Eskişehir from that lodging life, my grandmother came to live with us and stayed in the hospital for a while. Sometimes I cooked for my brother, my father was working, my mother was taking care of my grandmother, etc. Since we spend a lot of time with him, maybe that's why I feel like his parent, I think it may be coming from there."

"Şöyle ben abla olmayı çok ciddiye aldım sanırım hep böyleydi hep ciddiye aldım. Çok küçük yaşlardan beri belki altını değiştirmedim ona yemek yedirmedim vs ama ben de onun sorumluluğunu çok fazla üzerime aldım evet etkili olmuş olabilir. Kardeşimin sorumluluğunu bu kadar benimsemek benim için biraz korkutucu oldu yani annem var babam var ikisi de çok fazla ilgililer zaten kardeşimle ben neden o sorumluluğu aldım ve kendime onu bu kadar yük yaptım. Ben şeyi fark ettim o kadar sorumlu hissediyorum ki ben kardeşimden

onun başarısı mutluluğu her şeyi yapmalıymışım gibi hissediyorum. Sonra dedim ki kendime kendi çocuğum olsa ne yapacağım hani bu benim çocuğum bile değil beni kardeşim hani. Bunu bu kadar benimseyip her şeyi bu kadar düşünüyorken kendi çocuğuma manyak olurum herhalde diye düşündüm." "*Ha bir de şu etkili olmuş olabilir. Kardeşimle biz sonra Eskişehir'e taşındık o lojman hayatından anneannem bizimle yaşamaya başladı ve bir süre hastanede yattı. Yeri geldi ben ona yemek yaptım babam çalışıyordu annem anneannem ile ilgileniyordu vs biz çok onunla vakit geçirdiğimiz için belki de ben o yüzden kendimi onun ebeveyni gibi hissetmeye oradan geliyor olabilir diye düşünüyorum kendi kendime."*

When we look at the relationship between her mother and grandmother, Begüm talked about instrumental parentification her mother had experienced just briefly due to lack of investigation of the issue as a limitation of the study.

"If it comes to the mother part, my mother is the youngest in the house, she has an older sister and an older brother. But my grandmother was a very angry woman because she was an angry woman, she was not a person who showed much love. My grandmother has always favorite people, it was always like that. If she has three children, my uncle is her favorite and she approached her daughters like the people who helped her."

"Anne kısmına da gelecek olursak, annem evin en küçüğü, bir ablası bir abisi var. Ama anneannem çok sinirli bir kadınmış sinirli bir kadın olduğu için çok sevgisini gösteren bir kadın değilmiş. Anneannemin hep favorileri var hep öyle olmuştur 3 tane çocuğu varsa dayım onun favorisidir kızları da ona yardımcı olan insanlar gibi biraz yaklaşmış."

The above example shows that although the participant mentioned her mother and father as responsive parents, and she cannot figure out why she took that kind of responsibility, there may be still feeling of over responsibility for the younger child's wellbeing, mood, and social-emotional needs in general.

Banu also explained how taking care of her siblings influences her decision. In this point, Banu talked about how she had a difficulty due to expectations her parents had requested her which overburden her during the separation-individuation process:

"The thing is very important to me: Will I be able to be enough for that child?, Will I be able to raise that individual properly?- because I don't think he will be my valuable thing. When I get old, I won't tell him take care of me or pay my bills. I tried so hard to get this bond off with my family because I was the eldest kid, they made me do everything and I had a business life and I had to leave the business meeting and take care of my brother's school or something and I thought 'ehh I don't have any children so why am I dealing with these things?' I mean, I don't want that because I don't think it should be that connected, you know, just like I live my own life if I have money, if I can get

> something, for example, I think such a financial expectation should not occur between two individuals, so everyone should live their own life. I mean, I always looked after my siblings and stuff because I was a big kid because my mother worked when they were little. For example, Hüda, my youngest sister used to call me mom for a long time, because she was very young because she saw me more than my mom. That's why there may have been such boredom, you know, 'well I don't want children'."
>
> *"Benim için ee şey çok önemli: Ben o bireye yetebilecek miyim? Ben o bireyi düzgün bir şekilde yetiştirebilecek miyim? Çünkü bence o benim değerli bir şeyim değil, olmayacak da. İşte ben yaşlanınca hadi koş gel bana bak ya da benim faturalarımı öde demeyeceğim de. Ben bu bağı ailemle koparmak için çok uğraştım, en büyük çocuk olduğum için her şeyi bana yaptırıyorlardı falan ve benim bir iş hayatım vardı iş toplantısından çıkıp kardeşimin okuluyla falan ilgilenmek zorunda kalıyordum ve ben böyle bir yerde 'eehh benim çocuğum yok ki ben niye bunlarla uğraşıyorum?' falan olmuştum. Yani ben onu istemiyorum çünkü hani bu kadar bağlantılı olunmamalı ben nasıl kendi hayatımı yaşıyorsam param varsa alabiliyorsam bir şeyleri falan mesela o öyle bir mali beklenti falan da oluşmamalı iki insan olgusu arasında, herkes kendi hayatını yaşasın yani. Hani ben hep büyük çocuk olduğum için kardeşlerime falan baktım hep onların küçüklüklerinde annem çalıştığı için. İşte Hüda mesela en küçük kardeşim uzun süre bana anne diyordu, çok küçük olduğu için, beni daha çok gördüğünden dolayı falan. O yüzden böyle bir bıkkınlık gelmiş olabilir hani 'eeh çocuk istemiyorum' falan diye."*

She then briefly talks about both her mother' and father's instrumental parentification experience:

> "My mother wanted to study very much, but because she was the eldest sister and my grandmother gave birth all the time, they need someone to look after those children, so they did not send her to school. My father came to Istanbul from Kars at a very young age and started working in constructions at the age of 13."
>
> *"Benim annem okumayı çok istemiş ama en büyük kız kardeş olduğu için ve anneannem sürekli doğurduğu için o çocuklara bakacak birisi lazımmış, okutmamışlar. Babam çok küçük yaşta 13 yaşında Kars'tan İstanbul'a gelip inşaatlarda çalışmaya başlamış."*

Lastly, also there will be given two examples about the role of parentification on the decision-making process but for these examples, there is no known intergenerational transmission of parentification due to lack of investigation of the issue. Melis talked about from the beginning of the divorce process between her parents mainly because of her father's gambling addiction, she expressed emotional parentification such as trying hard for a good family atmosphere, feeling alert to their emotions, and responsible for their well-being This can also reflect an example for

over-under functioning in family; if one parent does not take the adult responsibilities, the child may act like as if she is the adult one. She explained:

> "I don't remember being a kid after 8 years old, I was very mature, my process until the age of 14 was like this. I don't even remember being a kid when I think about it now. I did not spend my adolescence like a teenager. It's like that, when I was 10 years old, my parents were divorced, when I was 13 years old, a new father came and I was trying to keep up with him, my adolescence exploded between the ages of 20-23. I was just a kid that you could sit and talk to me from 9 years old. I was the one who had already learned to rup up the right way at that age, I took charge of myself the duty of 'everybody should be happy and should get along well' so I was the person who set the environment. Believe me, I wanted to give up this habit a lot, but I still see myself doing this… I don't think my relationship with my mother is like mother and daughter, we had to be friends completely with the divorce process. I would like to have a mother-daughter dialogue, you know, sometimes some girls trip their mother like this, "oh mom, of mom," we could never be like that, I've always been like 'okay mom, yes mom'. I always have been a child who had to understand her mother. I became a good listener, I was a friend of her completely, actually, I can say that she completed the whole process on me and with me, so sometimes I even think that she did something wrong for my life."
>
> *"Ben 8 yaşından sonra çocuk olduğumu hatırlamıyorum, çok olgundum, 14 yaşına kadar geçen sürecim de böyle geçti. Ben gerçekten şimdi de düşündüğüm zaman çocukluk yaptığımı bile hatırlamıyorum. Ben ergenliğimi de ergen gibi geçirmedim. Çok böyle hani 10 yaşındayım, annemler boşanmış, 13 yaşındayım, yeni bir baba gelmiş ve ona ayak uydurayım öyle geçireyim böyle geçireyim derken benim ergenliğim 20-23 yaş arasında patladı. Baya böyle beni karşınıza alıp oturup konuşabileceğiniz bir çocuktum ben 9 yaşından itibaren. Böyle ortalığı yapan, nabza göre şerbet vermesini o yaşlarda öğrenen, herkes aman mutlu olsun herkes iyi geçinsini kendine görev edinmiş, ortamı ayarlayan bir insandım. İnanın bu huyumdan çok vazgeçmek istedim ama oturuyor hala kendimde bunu yaptığımı görüyorum… Annemle ilişkim anne kız gibi olduğunu düşünmüyorum, boşanma süreciyle beraber tamamen arkadaş olmak zorunda kaldık. Yani bir anne kız diyaloğu kuralım isterdim ara sıra hani böyle annesine trip yapan kızlar olur ya 'aman anne, üf anne' bizde o hiç olamadı ben hep böyle 'tamam anne, efendim anne' ben annemi hep anlamak zorunda olan bir çocuk oldum. İyi bir dinleyici oldum, arkadaşıydım tamamen, aslında bütün o sürecini benim üzerimde ve benimle beraber tamamladı diyebilirim o yüzden yeri geldi bana benim hayatımda bazen bu konuda kötülük yaptığını bile düşünüyorum."*

When the researcher asked the participant: "Do you think whether there is a role of family factors on the decision-making process of voluntary childlessness", she answered:

> "I think there might be something underlying it, but I couldn't discover it, for example, even being a child of a divorced family might actually have affected

it or seeing many divorced family members around me might have had an impact, you know, it's not nice. Ithink every time adults act without thinking about children. It may be at the bottom."

"Bence altında bir şey yatıyor olabilir ama ben bunu keşfedemedim, mesela boşanmış bir ailenin çocuğu olmam bile aslında buna etki etmiş olabilir ya da çevremde çok boşanmış aile çocuğu görmek de etki etmiş olabilir, hani hoş değil ya. Bence çocuklar düşünülmeden hareket ediliyor her şeyde. Bu belki de alt tarafta vardır."

Another participant, İsmail, also talked about how the responsibilities that he felt for his sister, Yaren, affected his decision to be voluntary childlessness:

"She got married, the process of divorce and then the ongoing process. During this period, I think my father was unnecessarily involved in everything, so he completely lost his authority in my eyes against Yaren. Interestingly, I became the authority in the house against Yaren, and they expected me to constantly talk to her and warn her about the things she did wrong, which is not nice for me. They use an expression in the house like she doesn't listen to us, but she finds what you say makes sense and listens to what you say, at least you talk, but I believe that if you go to people and tell them what to do all the time, after a while, they won't listen to you. Therefore, if you need to warn about something, this is something that should be done on very basic points and when it is necessary, but here she comes home late, they say to me, call and talk to her so she can come home on time. I do not find it healthy to call Mersin and tell my sister that. In other words, I think the problems with Yaren are serious problem for me and I don't want to deal with it, so I don't want to deal with it in any area of my life."

"Evliliği oldu, işte boşandı, boşanma süreci ve sonra akabinde devam eden süreç oldu. Bu dönemde babam bence gereksiz derecede her işin içerisinde, dolayısıyla tamamen otoritesini kaybetti benim gözümde Yaren'e karşı. Evin içerisindeki ilginç bir şekilde otorite makamı Yaren'e karşı ben oldum ve benden de sürekli Yaren'le konuşmamı, yanlış yaptığı şeyler için uyarmamı falan beklediler, ki bu durum benim için hoş değil. Yani şöyle bir ifade de kullanıyorlar evin içerisinde sürekli, ya işte bizi dinlemiyor ama senin söylediğin şeyleri mantıklı bulup senin söylediklerine kulak asıyor, en azından sen konuş, ama yani bu da şöyle, ben şuna inanıyorum insana gidip sürekli ne yapması gerektiğini söylerseniz, bir yerden sonra sizi dinlemeyi bırakacaktır. Dolayısıyla hani eğer bir konuda uyarma ihtiyacı duyuyorsanız, bu çok temel noktalarda ve gerektiği zaman olması gereken bir şey, ama işte Yaren eve geç geliyor, ara konuş eve vaktinde gelsin. Ya bunun için ben Mersin'i arayıp kardeşime söylemeyi çok sağlıklı bulmuyorum. Yani, Yaren'le ilgili sıkıntılar ciddi problem bence ve ben bununla uğraşmak istemiyorum, yani hayatımın hiçbir alanında bununla uğraşmak istemiyorum"

His wife Burcu also thinks that "When I think about İsmail, I can think that maybe the arrows are pointing towards Yaren, and when I look at Yaren's position and

the difficulties his father went through, I can think that his decision might be as a reaction to the troubles of that family."

2) Intergenerational discontinuity: Breaking the social norm of child-centered living as changed scenarios

The second theme is breaking the social norm of child-centered living as changed scenarios. Intergenerational discontinuity takes place when patterns are worked to change, so they are no transmitted to the next generations as repetitive scenarios but become changed scenarios. Almost all participants do also emphasize that there is a societal norm that the road is predetermined; you get married and have a child, you do not deeply think about you want a child or not. They especially highlight when the researcher asks: "Do you think you were a planned baby?" Most of them say that they don't think so. For example, Ahmet states for his parents: I don't think they think too much, anyway, everything comes from not thinking too much. The reason why we don't have children is that we think a lot. Our parents got married, they had a child, 3-4 years later, they had another child. They didn't think." Similarly, Murat says: "My parents got married on August 15 and I was born on June 23." Uğur agrees that: "My general opinion is that most people decide on this issue without much thought. For example, children are everywhere."

Ömer gives example from his parents:

> "Having children as soon as getting married is one of the main traditions of ours. Our parents also had children as soon as they got married in the same way. I am the first child. Afterward, as I said I don't know if there would be more than two a year apart if there were no miscarriages, but so it is a child-centered family. Well, I don't think they were very conscious or made a choice. I think they had children without realizing it, in a pattern. They have become responsible without realizing it."
>
> *"Bizde de tabii geleneklerden süregelen evlenir evlenmez çocuk sahibi olmak. Bizim anne babalar da aynı şekilde evlenir evlenmez çocuk sahibi olmuşlar. İlk çocuk benim. Sonrasında işte dediğim gibi düşükler olmasa birer yıl arayla belki ikiden fazla olur muydu bilmiyorum ama çocuk merkezli yani aile. Valla çok bilinçli olduklarını ya da bir seçim yaptıklarını düşünmüyorum. Onlar da bir kalıbın içerisinde bence farkında olmadan çocuk sahibi olmuşlar. Farkında olmadan sorumluluk sahibi olmuşlar."*

Some active deciders like Miraç identified this predetermined road as a loop:

"In the beginning, it was something that happened in my childhood in a way I didn't know why, I used to think that if I had such a chance one day, I would prefer not to have a child, but you know, this is not usually the case in Turkey. People think in certain patterns in Turkey, like it is thought that you study, then graduate, go to the military, get married, and have children. Many people around me think the same way. "

"Benim başlarda daha çocukluğumda gençliğimden neden olduğunu bilmediğim bir şekilde olan bir şeydi kafamda çok hani bir gün öyle bir şansım olursa olmasın diye tercih ederdim diye düşünürdüm ben, ama hani bu genelde Türkiye'de böyle olmuyor. Türkiye'de daha çok şey düşünülüyor, işte belli kalıplarla okursun, mezun olursun, askere gidersin, evlenirsiniz ve çocuk yaparsınız şeklinde düşünülüyor. Benim de etrafımda birçok insan aynı şekilde düşünüyor."

"I always say that one needs to know a little more about what one loves, from the moment they start their life, they usually don't have such a chance because they come from the military, find a job, married, have children, and meanwhile, in this cycle, people don't have time to notice anything, even if they realize, they don't have time to change it."

"Hep söylüyorum insanın ne sevdiğini biraz daha bilmesi gerekiyor, hayatına başladığı andan itibaren çok böyle bir şansı olmuyor genelde çünkü askerden geliyorlar, iş buluyorlar, evleniyorlar, çocuk yapıyorlar ve bu arada o döngüde insanların bir şey fark etmeye zamanları olmuyor fark etseler de bunu değiştirecek zamanları olmuyor."

In contrast to that societal norm most of their parents were internalized, all participants believe that the decision of having a child should be a matter of choice rather than a necessity or a requirement. They do not experience it in such a way that their parents have children without much thought, instead; they think that the decision-making of raising a child or not is a serious one. As Begüm says: "I think the kid is one of the last things to think about because it should be the next". Oğuz similarly states: "From my point of view, I am actually on the side that cannot make much sense of the meaning that is loaded on having a child. I don't think all people have to be parents. It has to be by choice."

Deniz expresses how her opinion has changed through time, so now she thinks whether having a child or not should be a choice:

"When our relationship first started, I was always thinking about something like that: 'We will graduate from university, we will find a job, then we will have a child or something, so we will get married.' I thought it all had to happen anyway. I gradually realized that it didn't have to be this way. I thought I may have a right to decide such a thing."

“Bizim ilişkimizin ilk başladığı dönemlerde, ben hep şey diye düşünüyordum: ‘Zaten üniversiteden mezun olacağız, iş bulacağız sonra çocuğumuz falan olacak yani evleneceğiz.’ Bunların hepsi zaten olmak zorundaymış gibi düşünüyordum. Bunun bu şekilde olmak zorunda olmadığını yavaş yavaş fark ettim. Benim böyle bir şeye karar verebilme hakkım var galiba diye düşündüm.”

"For example, when we look back at our childhood, we notice something that there were no children or unmarried people around us. Everyone was married, they had children for sure. Even though they tried very hard, somehow everyone had children. I don't think this is a requirement.”

“Mesela çocukluğumuza dönüp baktığımızda şeyi fark ediyoruz. Etrafımızda hiç çocuğu olmayan ya da evli olmayan insan yoktu. Herkes evliydi, kesin çocukları vardı. Çok uğraşsalar da bir şekilde herkes çocuk sahibi oluyordu. Ben bunun böyle bir zorunluluk olmadığını düşünüyorum.”

Dilara continues that:

"So, of course, the children will be the continuation of the generation, the continuation of the lineage, but it does not have to be with us, or there is no such thing that every married couple has to have children. For example, yes, everyone gets married in the first days, this has turned into something when you get married, you will have a child, then the first will not be enough, you will also do the second child because he should not be without siblings. So, this is something that is imposed and regarded as everyone has to go this way."

“Yani tabii ki çocuklar neslin devamı, soyun devamı olacaktır büyük ihtimalle ama yani bu bizimle olmak zorunda değil veya her evli olan çift çocukyapmak zorunda diye bir şey yok. Biz mesela evet ilk zamanlarda herkes evleniyor, bu artık şeye dönmüş hani evleniyorsun, çocuğun olacak, sonra birinci yetmeyecek ikinciyi de yapacaksın çünkü onun kardeşsiz kalmaması gerekiyor. Yani bu böyle dayatılan bir şey ve herkes sanki bu şekilde ilerlemek zorunda.”

Secondly, some of the participants are also complaining about how their parents or relatives expect them to have a child despite that they express their negative opinion or unwillingness. Since there is a societal norm that everybody at least wants a child, or will have a child eventually, participants’ decision of voluntary childlessness is not taking seriously, and consequently, they express that they are not accepted as a family without children. Some participants stated that their family and/or relatives believe that it is the child that makes a family a family, and they are not agreed with that opinion. For example, Halit expressed that his extended family sees a child as a necessity: “For once in my extended family, the child is regarded as the order of Allah and the sunnah of the prophet, it is unthinkable that it will not happen. A family will be formed, a child will be made." And similarly, Ayşe’s parents regard child: “It's like

completing the family. That is their point of view." And Uğur says: "Two people are missing but when the child arrives it's complete."

Moreover, Melis talked about how there are some terms in the society that are reproduced the idea that a child completes the family as a family:

> "I think that there are very stable and completely emptied concepts in our society, such as 'a family without children is not a family', 'children are the joy of the house', there are many sentences that come from ancient times, such as 'Is it okay without children?, no', but we look at the present day that no child saves the home, even there are a lot of couples, who had a child shortly after marriage and then divorced when those children were 1-2 years old, at this point, we clearly understand that they did not save the home."
>
> *"Bizde böyle çok stabil altı tamamen boşaltılmış kavramlar olduğunu düşünüyorum, 'çocuksuz aile aile değildir', 'çocuk evin neşedir' işte 'Çocuk olmadan olur mu? olmaz' gibi ta eskilerden gelen günümüze bence altı boşaltılmış bir sürü kelime kullanılıyor, ama günümüze bakıyoruz ki hiçbir çocuk yuvayı kurtarmıyor, hatta evlendikten kısa bir süre sonra çocuk yapıp sonra o çocuklar 1-2 yaşına gelince boşanan çift dolu etraf, buradan da yuvayı kurtarmadığını zaten net anlıyoruz."*

Nilüfer similarly states that her notion of family is also different than her parents':

> " I think being a family… How can I say? Wanting to spend your life with a person you love and someone who makes you feel loved too. That you don't need any other people…At the same time, he is your best friend and at the same time, the most trusted person, at the same time, this is actually being able to provide all his needs with one person and not needing anyone else when you with him. I'm not sure if my idea of the family fits with my family exactly because for them the concept of family actually happens when a child is involved. According to them, to be a family, a child, baby should come into the house, so, this is the definition for them but not for me. For me, it is nbeing together. Barış is my family, so I think we don't need anything extra."
>
> *"Ya bence aile olmak.. Nasıl diyeyim? Sevdiğin bir insanla onun da seni sevdiğini hissettiğin bir insanla hayatını beraber geçirmek istemektir. Başka herhangi bir insana ihtiyaç duymadığın… İşte aynı zamanda en iyi arkadaşın olan, aynı zamanda, en güvendiği insan olan, aynı zamanda, işte bu bütün ihtiyaçlarını aslında tek bir kişiyle sağlayabilmek ve onunla birlikte olduğunda başka hiç kimseye ihtiyaç duymamaktır. Ailemle tam olarak örtüşüyor mu emin değilim çünkü onlar için aile kavramı aslında bir çocuğun da işin içine girdiğinde oluşan şey. Yuva kurmak, aile olmak dediklerinde artık evin içinde bir çocuk, bebek geldiği, onlar için tanım bu, benim için öyle de değil. Benim için ikimizin birlikte olması. Barış benim ailem yani ekstra bir şeye ihtiyacımız yok diye düşünüyorum."*

Erdi thinks that his family notion does not correspond with his family's opinion. Likewise, Erdi, Dilara, and also few participants stated that they see their pets as their children. So, pets might be seen as a substitute for a child. Erdi said:

> "My family side is a little more classical. I certainly can't say that they are fanatic, but they say 'if there would be a family without children, my son, etc'. Since when they see Dilara and me, there are people who always say you will have a child, of course, this opinion of us does not coincide with their opinion. In other words, according to them, a child means a member who completes the family, and also an individual who will ensure the continuation of the lineage. But being a family for us, more precisely for me, we have a cat, so I think we are a happy family like this. It is our baby."
>
> *"Benim aile tarafım biraz daha klasik bir aile. Mutaassıp olduğunu söyleyemem kesinlikle, ama işte hani 'çocuksuz aile olur mu oğlum falan' diye ne bileyim. Bizi böyle Dilara ile gördükleri zaman ne zaman çocuk yapacaksınız diye sıkıştıran taraflar olduğu için tabii ki örtüşmüyor bizim bu düşüncemiz. Yani onların çocuğa onların bakış açısı aileyi tamamlayan bir üye, aynı zamanda soyun devamını sağlayacak olan bir birey anlamına geliyor ama bizim için aile olmak, benim için daha doğrusu, kedimiz var, yani biz bu şekilde mutlu bir aileyiz bence. Çocuğumuz o bizim."*

Thirdly, a lot of participants emphasize that how children change married couples' lives in a way that the child becomes the turning point of their life. They describe the situation as if they do not have their own lives or put their lives on the back burner so that they live for their children. For example, Barış says "I might add the emotional charge. I'm not so used to and ready to have to love someone so much to dedicate my life to it." According to Halit and his wife, Ayşe, there is a huge difference between before a child is born and after a child comes. Halit expressed that: "Let's just say what they turn into strengthens our firm stance. We can separate them into before the child and after the child." Ayşe continues: "So we can say that it is a living example for us. They also make us feel that it is a good feeling, and we feel it very well. But from the other point of view, everything is focused on the child." According to Halit, "We just passed our 30s and we haven't lived our own lives yet. Therefore, we are not ready to live the life of another individual, organism. We don't have such a time, such a motivation, such energy."

Ayşe agrees by saying:

> "We have already studied and worked until this age, we couldn't do the things we would like to do, so we couldn't even put them into plans. After this time, a

new person comes into your life while I haven't experienced anything, and you start living the child's life completely."

"Bu yaşımıza kadar zaten okuduk, çalıştık, yapmak istediklerimizi yapamadık, planlara dahi koyamadık. Bu süreden sonra ben hiçbir şey yaşamamışken hayatına yeni biri giriyor ve sen tamamen çocuğun hayatını yaşamaya başlıyorsun."

Halit gave example from his parents' lives, "I see my parents, especially after we got married, after eliminating their own financial concerns of work, they turned into something like this: 'Why do we exist now? We exist for you, my child'. I look I don't want something like this." When the motivations behind voluntary childlessness were asked to the participants, most of them expressed that they did not want to live their lives based on a child as their parents' experience.

Similarly, Sinan expresses how their family view raising a child:

" I think for the previous generation, based on my own family, Serpil's family and the families of other friends I have observed, I can say that having children is a great sacrifice for them. Their perspective on life is about sacrifice. At least that's what I see."

"Kendi ailemden, Serpil'in ailesinden ve gözlemlediğim diğer arkadaşlarımın ailelerinden yola çıkarak bir önceki nesil için çocuk sahibi olmanın onlar için büyük bir fedakârlık olduğunu söyleyebilirim. Hayata bakış açıları fedakârlık üzerine kurulu. En azından benim gördüğüm kadarıyla böyle."

Similarly, Öykü said:

"I look at my mother and father, they had children and they completely forgot about themselves, both in terms of personal care and psychologically, they completely put themselves in the background. I don't want to be like this, I definitely don't want to forget myself. I don't want to forget myself for someone I don't know right now, this is the first factor."

"Annemle babama bakıyorum, çocukları olmuş ve kendilerini tamamen unutmuşlar hem kişisel bakım hem de psikolojik olarak, kendilerini tamamen geri plana atmışlar. Ben böyle olmak istemiyorum, kesinlikle kendimi unutmak istemiyorum. Şu an tanımadığım biri için kendimi unutmak istemiyorum, bu birinci etken."

Or Deniz express that:

"I usually notice this a lot especially when I see the big change in those lives of people who have children. Especially my older brother had children, everything got really mixed up. Somehow, they act as if they don't have their own order or their own lives. Almost our mother behaved in the same way. Likely, everyone's parents did the same as well. When I see someone who put their own lives on hold after they became a child, either by necessity or by their

own will, I say that I am glad I thought of such a thing. I think I could be in the same hole right now."

"Ben de genellikle özellikle şeyde çok fark ediyorum bunu çocuk sahibi olan insanların o hayatlarındaki büyük değişikliği gördüğümde. Özellikle abimlerin olduktan sonra gerçekten her şey çok karıştı. Bir şekilde kendi düzenleri, kendileri yok gibi davranıyorlar artık. Neredeyse bizim yani benim annem de aynı şekilde davranmıştı. Büyük ihtimalle herkesin ebeveyni de öyle davranmıştır. Bir çocuk olduktan sonra kendi hayatlarını mecburen ya da kendi istekleriyle askıya aldıklarını gördükçe diyorum ki iyi ki böyle bir şey düşünmüşüm. Şu an ben de aynı çukurda olabilirdim diye düşünüyorum."

For example, İsmail describes how he observed the changes in his parents' lives:

"On the other hand, for example, something makes me very nervous. I always say that it's a cessation, give up on their own social life was happened in my family. There were many reasons for this, there were economic reasons because the budget was clear in my family. Also, we did not have an opportunity like a military camp, or we did not have the opportunity to have an economic holiday because my family had to give up on those things to raise us. Here they had to give up their own social relations to give time for us. These are the things I have observed in them, and I think I do not want to experience them. So, it doesn't have much to do with what I see directly from the family, it's not just blaming my own family. When I look around, when I look left and right, I see that these are similar in many families, but the place where I am most directly in and see down to the smallest detail is my family."

"Bir de bununla beraber mesela şey de beni çok geriyor, ben hep söylüyorum işte bir vazgeçiştir dedim ya, kendi sosyal hayatından vazgeçmek benim ailemde oldu. Bunun birçok sebebi oldu, ekonomik gerekçeler de oldu çünkü bütçe belliydi ailemde. İşte bizim tatil imkânımız, askeri kamp gibi bir imkânımız da yoktu, ekonomik bir tatil yapma imkânımız da olmadı, çünkü ailem bizi yetiştirebilmek için bunlardan vazgeçmek durumunda kaldı. İşte bize zaman ayırabilmek için kendi sosyal ilişkilerinden vazgeçmek zorunda kaldılar. Benim onlarda gözlemlediğim şeyler bunlar ve ben bunları yaşamak istemediğimi düşünüyorum. Yani bunun doğrudan aileden gördüğüm şeyle de çok ilgisi yok, bu sadece kendi ailemi suçlamak değil. Etrafıma baktığım zaman, sağa sola baktığım zaman birçok ailede bunların zaten benzer olduğunu görüyorum ama hani en doğrudan içinde bulunup en ince ayrıntısına kadar gördüğüm yer benim ailem."

Similarly, Gizem gives example about her parents:

"They've never thought otherwise, and they haven't done much for their own lives other than us. Their lives have always been based on us. So, we were always the focus, never a different priority, things they wanted to do differently, they never had anything like that. Now they're slowly trying to do it a little bit, but their youth was a bit of a total devotion or something. I mean, even when I don't have children, sometimes I can't find time or energy for many things I want to do, I can't imagine myself in a scenario where I can totally do anything, throw myself into the background and live for my child. "

“Daha farklısını hiç düşünmemişler ve işte kendi hayatları için bizim dışımızda çok fazla bir şey yapmamışlar. Hayatları hep bizim odağımızda olmuş. Yani hep odak bizdik, hiç farklı bir öncelik, farklı yapmak istedikleri şeyler vs., hiç öyle şeyleri yoktu. Şimdi yavaş yavaş birazcık onu şey yapmaya çalışıyorlar ama gençlikleri birazcık tamamen adanmışlık filan gibi bir modda geçmiş yani. Yani bir de hani çocuk sahibi değilken bile yapmak istediğim bir sürü şeye bazen vakit bulamıyorum, enerji bulamıyorum, kendimi tamamen şey yapabileceğim yani arka plana atıp çocuğum için yaşayabileceğim gibi bir senaryoda düşünemiyorum kendimi."

Apart from their observations, some participants also mentioned the conversations about the cost of raising a child with their parents or their impressions on their parents’ implicit expression about the disadvantages of raising a child. Since these conversations or implicit expressions are transmitted to the participants, they may influence their decision-making process of being voluntary childless. For example, Banu says that last time my mother said; "newborn children are always born sick, never mind, don't give birth" or something like that, but their heads come and go, you know." Another example is given by Öykü:

“My mother always tells me that it's nice to have a child, you love her so much, she becomes your whole life. You can't see anything but her. It's great a love, but when she's sad, you feel 10 times sadder. When she hurts, it hurts you 10 times more. So, don’t have a child because it will make me sad to see you feel so sorry for your child. While you will be 10 times sad for your child, I will be 100 times sad. She still thinks of me. You haven't spent much time for yourself as you wish until now. You always study. You know, you couldn't live your childhood and youth long. From now on, return to yourself. Then she says how will you take care of yourself since if you have a child, she will become your whole life. For example, when your sibling was born, I felt like they tied a stone to my foot, I can't go anywhere. It's like I only have to take care of him and I was 40 anyway. On the one hand, I felt like my freedom was gone completely. She says you made the right decision, my child, having a child is not a thing for you and it was not for me either."

“Annem bana hep söyle söyler bir çocuğu olması çok güzel, onu çok seviyorsun, bütün hayatım o oluyor. Ondan başka bir şey gözün görmüyor. Çok büyük bir sevgi ama üzüldüğü zaman da 10 katı üzülüyorsun onun canı yandığı zaman senin 10 katı canın yanıyor. O yüzden sen çocuk yapma çünkü senin birisi için öyle üzüldüğünü görmek beni daha da çok üzecektir. Sen çocuğun için 10 kat üzüleceksin, ben 100 katı üzüleceğim. Yine beni düşünüyor hala. Bu zamana kadar çok zaman ayıramadın. Hep Ders çalıştın. Hani böyle gençliğini ve çocukluğunu çok yaşayamadın. Şimdiden sonra biraz kendine dön. Bir de şimdi çocuğun olursa bütün hayatın olacak o zaman sen nasıl kendinle-ilgileneceksin falan der. Mesela kardeşin doğduğunda, ayağıma taş bağlamışlar gibi hissettim, hiçbir yere gidemiyorum. Sanki sadece onunla ilgilenmem gerekiyordu zaten 40 yaşındaydım. Zaten bir yandan yaşım ileri

özgürlüğüm tamamen yokmuş gibi hissettim. Annem çok doğru bir karar vermişsin çocuğum, çocuk yapmak sana göre bir şey değil bana göre bir şey de değildi diyor."

Moreover, İsmail also believes that although their parents were not explicitly implying the negative consequences of having a child such as limited social life, he implicitly feels that:

> "Sometimes people feel that way. You think you're happy with what you're doing, you think that's the way it should be, and you try to convince yourself of it, and you believe it superficially. But subconsciously, this creates some trouble for you. For example, if your children are not the way you want, it will make you unhappy at some points, especially I think that this is the case with my father. And this has the following consequences, in other words, when you take your hands off from everything, the number of people around you begins to decrease inevitably. Because this is a reciprocal relationship, commuting, meeting, and making phone calls. Therefore, indirectly, people isolate themselves from their surroundings. I think that this also makes them unhappy, but they do not express this in any way. So, I think it's something they were implicitly expressing a bit more. If we asked them, they are happy with their choice, but I say that as their 27-28-year-old child, they are not happy with the results of these choices."
>
> "*Bazen insanlar hani o şekilde hissederler ya. Yaptığın şeyden mutlu olduğunu düşünürsün, olması gerekenin bu olduğunu düşünürsün ve kendini buna inandırmaya çalışırsın ve yüzeysel olarak da inanırsın. Ama bilinçaltında bu senin bazı sıkıntılarını doğurur. Mesela çocukların istediğin gibi olmazsa bazı noktalarda, bu seni mutsuz eder, özellikle ben bunun babamda bu şekilde olduğunu düşünüyorum. Bir de bu şöyle sonuçlar doğuruyor, yani bu kadar her şeyden elinizi ayağınızı çektiğiniz zaman etrafınızdaki insan sayısı da azalmaya başlıyor ister istemez. Çünkü bu bir ilişki karşılıklı olarak gidip gelmek, görüşmek, telefonlaşmakla oluyor. Dolayısıyla ikincil olarak, dolaylı olarak kendi etrafından da soyutluyor insanlar kendilerini. Bunun da kendilerinin, onları mutsuz ettiğini düşünüyorum ama bunu hiçbir şekilde dile getirmiyorlar. Yani biraz daha örttükleri bir şey olduğunu düşünüyorum ben. Onlara sormuş olsak bu tercihlerinden mutlular ama ben onların 27 28 senelik çocuğu olarak söylüyorum, bu tercihlerin sonuçlarından mutlu değiller aslında*."

Similarly, Melis thinks, if she would be a mother, she will repeat the child-centered living similar with her mother, so she does not want this to be happened by saying:

> "I would focus, it would become my whole life, my everything, and I would definitely neglect something, or I could not have been a good businesswoman, when I became a mother, something would definitely be missing so that my motherhood would be complete. This is one of the important factors for me, so maybe it seemed hard to focus on one thing and give up on other things."

"Evet odaklanırdım, o benim hayatım her şeyim olurdu ve mutlaka bir şeyleri ihmal ederdim ya da iyi bir iş kadını olamayabilirdim anne olduğum zaman ya mutlaka bir şeyler eksik olacaktı anneliğim tam olsun diye. Ya bu da benim için önemli etkenlerden bir tanesi o yüzden bir şeye bu kadar odaklanıp diğer şeylerden vazgeçmek belki de zor geldi yani."

3) Having a child in the modern world is a decision that needs serious consideration

The third theme is having a child in the modern world is a decision to think about during the decision-making process of voluntary childlessness. First of all, some participants mentioned that in today's modern world the value of a child is different than when their parents raise their children or previous generation. They stated that children were more treated as if they are an individual who can contribute family's economic power, they were more likely to be child labors who work in the family business. In other words, children were seen as more practically useful for the entire family. On the other hand, in the modern world the worth of a child is more about emotional, Miraç explains how the concept of the value of child has changed:

"We have not been living like this as a society for many years. If you look at it from an anthropological point of view, after the agricultural revolution, we started to attach a very tight meaning to this family and child-bearing business, but the problem is that modern life is not suitable for this. In other words, the life we lived only one generation ago was more suitable to have children or to have many children. For example, if you look at the example of Turkey, before 1970 and 80, until this period, the population of Istanbul was 4 million, people mostly lived in rural areas and the child automatically had a function. Children were doing agriculture and animal husbandry with the family, there was no need to parent in what we understand in modern terms, and this continued for many years, but after people migrated to the city, other needs arose. That's why having a child used to be a necessity before, it wasn't an option in the village or the countryside, but in modern life, it should be an option in urban life, it shouldn't be a necessity because if you say it's a necessity, you have to give people suitable lifestyle to raise a child, but people do not live in that way, even living in an apartment has difficulties. So, I don't know, for example, you are hiring a babysitter, What will that caregiver do to my child? What can he or she do for money?, He will just sit next to him and play with his phone, if the child cries, he looks, there are thousands of factors that drive people away."

"Çok uzun yıllardır biz toplum olarak böyle yaşamıyoruz. Antropolojik olarak bakarsanız da tarım devriminden sonra, biz bu aile ve çocuk yapma işine çok sıkı sıkı anlam yükleyip sarılmaya başladık ama sorun şu ki modern hayat aslında buna çok uygun değil. Yani bizlerin bir jenerasyon bile önce yaşadığı hayat çocuk yapmaya ya da çok sayıda çocuk yapmaya daha uygundu. Mesela

Türkiye örneğinde de bakarsanız, 1970 ve 80 öncesinde bu sürece kadar İstanbul'un nüfusunun 4 milyon olduğu sürece kadar 83'e kadar diyeyim insanlar daha çok kırsal bölgelerde yaşıyorlardı ve otomatik olarak çocuğun bir işlevi vardı. Çocuk da tarım ve hayvancılık yapıyordu aile ile, bizim böyle modern anlamda anladığımız işte ebeveynlik yapayım ihtiyacı yoktu ve uzun yıllar da bu böyle gerçekleşti fakat insanlar şehre göç ettikten sonra başka ihtiyaçlar doğdu. Bu yüzden de hani çocuk yapmak eskiden bir gereksinimdi köy yerinde veya kırsal kesimde bu gereksinimdi, bir seçenek değildi yani fakat modern hayatta şehir hayatında bunun bir seçenek olması gerekiyor, zorunluluk olmaması gerekiyor çünkü buna bir zorunluluk derseniz insanlara o şekilde bir hayat tarzı vermiş olmanız gerekiyor ve fakat insanlar o şekilde yaşamıyorlar modern hayatı bir apartman dairesinde bile yaşamanın zorlukları var. Yani işte ne bileyim bir bakıcı tutuyorsunuz, çocuğa o bakıcı ne yapacak? Benim çocuğuma ne anlatabilecek para karşılığı? Sadece oturup yanında telefonuyla oynayacak, çocuk ağlarsa gidecek vs binlerce aslında uzaklaştıran faktör var insanları esasen."

"There are many issues that should not be passed on to the new generation. Why do I think like that? People have undergone a very serious transformation in the last 50 or 70 years, and unfortunately, people do not live according to this transformation, so they are not aware of it. For example, when Kardelen's mother was raised, the place where they lived in Antalya is a village, and it is nice that a lot of people live together in that village, it is a good thing to have a lot of support, but after a generation, we have evolved into a society that people have only one/two children or do not have. Having children is no longer a need, it's not a requirement, it needs to be a preference mode."

"Yani şöyle yeni jenerasyona aktarılmaması gereken birçok konu var. Neden öyle düşünüyorum? İnsanlar son 50 70 yılda diyeyim çok ciddi bir dönüşüm geçirdiler ve insanlar ne yazık ki bu dönüşüme göre yaşamıyorlar bunun bilincinde değiller yani. Kardelen'in annesi mesela yetiştirildiğinde Antalya'da yaşadıkları yer bir köy ve o köyde bir sürü insanın beraber yaşaması bir destek, bir sürü çocuğun olması güzel bir şeyken bir nesil sonra tamamen ondan başka bir ya da iki çocuğu olan bir topluma evrildik yani ya da hiç çocuğu olmayan. Artık çocuk yapmak bir ihtiyaç değil, bir gereksinim değil, bir tercih moduna geçmesi gerekiyor."

The above examples show the historical changes of value of the child. Many other participants stated that when they think about the concept of the child, 'burden' and 'stress' comes to their mind. Another side of the economic value of a childis also the idea that: "My children will look after me when I get old". Some participants claim that the idea of having a child to look after them when they are old is selfish though instead. For example, Ahmet says:

"For example, this thought seems very wrong to me. Let's have a child, she will look after us in the future. I see it in the people around me and it seems very selfish to me. It is very selfish though to put such a responsibility on a child I

gave birth to. Why should I bring a child to take care of you in the world? You give birth to experience your own emotional satisfaction, okay, you have raised him in such a way that when you get old, he looks after you when you are in need, but he looks after you if he wants to do it. Having a child just because he will do it…"

"Mesela bu düşüncede bana çok yanlış gelir. İşte çocuğumuz olsun ileride bize bakar. Çevremdeki insanlarda görüyorum ve bu bana çok bencilce geliyor. Dünyaya getirdiğim bir çocuk üzerine böyle bir sorumluluk yüklemek çok büyük bir bencillik yani. Sana bakacak bir çocuk niye ben dünyayı getireyim? Sen kendi duygusal tatminini yaşamak için dünyaya getirmişsin, tamam sen onu öyle bir yetiştirmiş olursun ki sen yaşlandığın zaman, muhtaç olduğun zaman sana zaten bakarsa bakar ama bu baya hani içinden geliyorsa bunu yapar Öyle yapsın diye bir çocuk dünyaya getirmek..."

Dilara also agrees that having a child so that she will look after when you become old is a selfish thought. She expressed:

"So, there is something said, it seems very selfish to me. Who will knock on your door when you are old? Who will take care of you when you are old? You will be alone, your husband may die before you or you may die before your husband, this time you will be alone. Who will knock on your door? This seems incredibly selfish to me… It's useless to have a child to take care of me when I'm old."

"Yani söylenen bir şey var, bu çok bencilce geliyor bana. Yaşlandığında senin kapını kim çalacak? Yaşlandığında sana kim bakacak? Yalnız kalacaksın, kocan senden önce ölebilir veya sen kocandan önce ölebilirsin, işte bu sefer yalnız kalacaksın. Kapınızı kim çalacak? Bu çok inanılmaz bencilce geliyor bana… Ben yaşlandığımda bana bakacak diye bir çocuğun olması çok gereksiz."

Lastly, Özgün also thinks similarly and says: "There are people who think like this, you have to have children, someone should take care of you when you get old.". When his wife says "Maybe he won't look, he'll be the bad son." He answers: Oh, maybe he won't, there's no guarantee, this is the first one. Secondly, as I said, the urge to have children should not be like this. This taught seems so selfish and mean to me, so I don't know. " To sum up, according to some participants, in the modern world, the value of child has changed from more economical to emotional which in turn may influence their concept of the child and at this point, having a child so that the child will look after parents seems selfish for them.

Secondly, some participants mentioned changing the understanding of parenting brings tremendous responsibility for individuals, so it can be talked about as an intergenerational discontinuity of the notion of parenting. As it was mentioned

before, parenting is a very complex and umbrella term that includes physical/material caring of the child like proving nutrition, shelter, clothing, putting them to sleep or going them to doctor, etc. Participants give more emphasis on parenting than physical caring for the child. For example, Miraç says: “Looking a child ideally means every minute of the child is either doing an education, adding something, or playing a game”. According to them, in today’s world, child education becomes more central for parent’s life, and they really think about all aspects of having a child and make a plan for it, for example, Dilara mention how the notion of parenting is different from before:

> "So, I think it's totally a cause for concern because from the moment he was born, a life focused on him and planning everything based on his needs, so it's not like it used to be, raising child as playing pitch and toss with anything. Right now, people decide which school they should send their child before a child is born. They dedicate their money and their resources to him. For example, they think if the child will go to a university that he needs that much funds to go to that school, etc. Before that, is there a world in which this child can live? Will there be? You need to think about these too, so these are always worries."
>
> *“Yani bence tamamen endişe kaynağı çünkü doğduğu andan itibaren sürekli ona odaklı bir hayat ve her şeyini planlayarak böyle, yani eskisi gibi değil ki saldım çayıra mevlam kayıra. Şu anda atıyorum doğmadan önce hangi okula gitmesi gerektiğine karar veriyor insanlar. Ona göre paralarını, kaynaklarını ona ayırıyorlar. İşte atıyorum üniversitede şu okula gitmesi için bu kadar fona ihtiyacı var falan filan yani. Bunlardan önce bu çocuğun yaşayabileceği bir dünya var mı? Olacak mı? veya nereye gidiyor? Bunları da düşünmek lazım yani bunlar hep endişe.”*

Kardelen gives another example of how her parents were only focused on the physical/material needs of her during childhood but neglects the importance of child education.

> "I can say with confidence that my parents are not people who will have a child in a very conscious, planned, and programmed way and devote their lives to child education. You know, like many people, we had children what should we do, let's raise them, let's not behave badly, I see it as something they try to do with their own knowledge and with their own right. I cannot even say that for my dad. My mother was also a female health worker who worked with her own effort, and she was a very busy work schedule. I remember her as she go to work, do housework and motherhood as best she could, she said, ‘This is how the world is and we have a child, let's do it like this,’ with her own effort.”
>
> *“Ben gerçekten hani ailemin bunu çok bilinçli çok planlı, programlı bir şekilde çocuk yapıp hayatlarını çocuk eğitimi adayacak insanlar olmadıklarını çok rahat söyleyebilirim bence kesinlik öyle değil. Hani birçok insan gibi çocuk yaptık ne yapalım hadi büyütelim kötü davranmayalım bir şekilde kendi*

bildikleriyle, kendi doğrularıyla yapmaya çalıştıkları bir şey olarak görüyorum. Babam için o kadar bile görmüyorum. Annem de kendi çabasıyla bir de çalışan bir kadın sağlıkçı bir de hani çok yoğun bir çalışma temposu da vardı hatırladığım hem ev iş hem ev kadınlığı hem annelik kendi elinden geldiğince o da hani 'Dünya böyle deyip çocuğumuz da var, böyle yürütelim' deyip, kendi çabasıyla bir şeyler yaptığını düşünüyorum."

Her husband, Miraç continues to explain how the perception of parenting in the modern world different than before:

> " There is a difference between parenting and caring in English here. In other words, being a parent and taking care of children are very intertwined concepts for us, but indeed, they are both very different concepts. Most of the people we know were taking care of the child but there are also a few that raise people. It is not even something we can do in our modern life maybe in the current situation. Parenting means giving your life and dedicating your life. Especially here in England, since they live further than us in terms of a transition to modern life, you can see it very clearly now families understand the difference between the two concepts very well, therefore, families make a lot of effort to raise their children. In our society, rather than taking care, children should need to be raised."
>
> *"Burada İngilizcede bir fark var ebeveynlik ve çocuk bakmak arasında bir fark var. Yani ebeveyn olmak ve çocuk bakmak bizde çok birbirine girmiş kavramlar ama ikisi de çok farklı kavramlar aslında, bizim tanıdığımız çoğu insan çocuk bakıyor, ama birkaçı da var insan yetiştiriyor yani. Bizim modern hayatta belki şuandaki durumda yapabileceğimiz bir şey bile değil. Ebeveynlik hayatını vermek hayatını adamak demek. Özellikle bizim burada İngiltere toplumunda modern hayata geçiş olarak bizden daha ilerde yaşıyorlar daha önce geçtikleri için çok belirgin bir şekilde görebiliyorsunuz artık aileler ikisinin arasındaki farkı çok iyi anlamış durumdalar, aileler çok çaba gösteriyorlar çocuklarını yetiştirmek için. Bizim toplumumuzda yetiştirilmeye ihtiyaçları var, bakılmaya değil."*

Then Kardelen talked about how caring, and parenting are interwoven terms: "Also, it seems very normal to us, it's enough to feed your child, for instance, even my father said to me: 'Did we break our world? (Bir sözünüzü iki mi ettik?) What did you ask for but was not taken? Where did you want to go but could not go?' Twice a year, we were going on vacation, these are ridiculous concepts." Moreover, Melis believes that "Having a child or not is a decision that needs to be seriously thought through since child profoundly affects the way you live your life". Similarly, Begüm states that her concept of the child does not correspond with her parents, so she thinks that this decision needs to carefully be considered since it requires serious commitment that parents need to do material and moral preparations:

> "I really think it's a big decision that need to be sit and think about it for a long time, discuss the responsibilities thoroughly, provide the necessary material and moral preparations, and you know this is a great commitment, so my definition of the child does not match with my family so much, this is also valid for many people I talk to, our definitions don't fit. I don't see myself as a person who can do this without thinking about the responsibility just because the people around me, even my family, want to love grandchildren from me, so it is something that should not be thought about for a long time and never rushed."
>
> *"Bu gerçekten üzerine oturup, çok uzun süre düşünüp, sorumluluklarını enine boyuna tartışılıp, gerekli maddi ve manevi hazırlıkları sağlanıp bu çok büyük bir bağ diyeyim gerçekten çok büyük bir karar bence o yüzden benim çocuk tanımım uyuşmuyor, yani benim ailem için de geçerli bu, konuştuğum birçok insan için de geçerli, bizim çocuk tanımlarımız uymuyor. Etrafımdaki insanlar benden ailem de olsa torun sevmek istiyorlar diye o sorumluluğu iyice düşünmeden bunu yapabilecek bir insan olarak görmüyorum kendimi o yüzden çok uzun süre düşünülüp hiç aceleye getirilmemesi gereken bir şey."*

Since according to some participants, changing the understanding of parenting requires the significant responsibility when having and raising a child and the requirement of parenting skills are necessary compared to previous times, participants think that everyone should consider whether they would be competent and suitable as a parent. For instance, Deniz thinks that "I don't think having a child is a necessity, but I also thought that these people should decide whether I am suitable for this. When I thought so, I decided that I was not fit to be a parent." Begüm similarly does not sure about parenting:

> "In other words, every day is full of surprises, it is not clear whether we will move from here tomorrow or the next day. It's not clear what will happen. And in such a volatile environment, to have a child and take that responsibility, or we may be unemployed the next day, we may not have an income, then what will happen to that child, we must adjust ourselves very well and think about it. But I think life is so volatile that we will never feel ready at least I am because it is such an area where I shouldn't make mistakes. That's why I can't be so sure of myself because I can be impatient. When I'm bored, I may not want to talk, I may not want to do anything. I mean, I'm probably taking care enough, but I'm not so sure about myself as I said about being a mother."
>
> *"Yani sonuçta her gün sürprizlerle dolu, yarın öbür gün bizim buradan taşınıp taşınmayacağımız belli değil. Ne olacak hiç belli değil. Ve bu kadar değişken bir ortamda çocuk sahibi olmak ve o sorumluluğu almak ya da yarın öbür gün işsiz kalabiliriz, bir gelirimiz olmayabilir, o zaman o çocuğa ne olacak yani her şeyimizle kendimizi çok iyi ayarlayıp bunu düşünmemiz gerekiyor. Ama bence hayat o kadar değişken ki biz hiçbir zaman ben en azından kendimi buna hazır hissetmeyeceğim çünkü bu hata yapmamam gereken bir alan. O yüzden kendimden çok emin olamıyorum çünkü sabırsız olabilirim. Canım sıkkın*

olduğunda konuşmak istemeyebilirim, bir şey yapmak istemeyebilirim. Yani yeteri kadar büyük ihtimal ilgilenirim ama kendimden çok emin değilim dediğim gibi anne olma konusunda."

On the other hand, some other participants underlined that they are proficient to be a parent but unwilling to do it due to high responsibility especially for woman. Melis thinks that she can be really a good mother but unwilling to do it due to high responsibilities, she says:

> "I'm not specifically talking about the man, but the woman has to analyze herself very well. Because the one who really takes care of the child is the woman. Of course, there are things that the father does, but the cornerstone of this is the mother. That's why I think women have a lot of work."
>
> *"Özellikle erkek için söylemiyorum ama kadın kendini çok iyi tahlil etmek zorunda. Çünkü gerçekten o çocuğa gerçek anlamda kadın bakıyor. Babanın tabi ki özverili olduğu ve yaptığı şeyler var ama bunun temel taşı anne. o yüzden de kadınlara çok iş düştüğünü düşünüyorum."*

Moreover, since parenting skills are highly required, the license of parenting was highlighted by some participants. For example, Miraç believes that everyone should have a license to be a parent like how we get a license before driving. He said:

> "People usually say to themselves that we can have many children, we take care and learn it somehow. I don't think this is true. People cannot be parents without knowing anything, I can go this far, currently, people take lessons in a year so that they can drive right and they are finally tested at the end of the year. They are really measuring whether you are competent to drive this car and not be involved in an accident, right? Being a parent is a choice, yes everyone should be, I don't object to that, but people become parents without knowing anything. They are trying to learn while it is happening, etc., there should not be such a thing. At least, people should learn the basics, that is, we see our friends who have a certain level of education and financial situation, you know, people actually do not know what it means to be a parent. As I said, if we lived in the last century, none of these would be a problem, but in this century, such things are really important, no one grows up in the field at the age of 4, so it used to be in the past, everyone was growing on their own at that time. But the era of growing on their own is over, now people don't grow on their own anymore."
>
> *"İnsanlar genelde şunu söylüyorlar kendi kendilerine çok çocuk olsun bakarız bir şekilde öğreniriz giderken falan diye düşünüyorlar. Ben bunun doğru olduğunu düşünmüyorum. İnsanlar hiçbir şey bilmeden anne baba olamazlar, hatta ben şu kadar ileri gidebilirim, bugün doğru araba kullanmak için size bir sene ders veriyorlar ve sonunda sizi bir sınava tabi tutuyorlar. Gerçekten siz yetkin misiniz bu arabayı kullanıp bir kazaya karışmacaksınız diye ölçüyorlar değil mi? Yani anne baba olmak bir tercih evet, herkes olmalı, ona bir itirazım yok ama insanlar hiçbir şey bilmeden*

anne baba oluyorlar. Olurken öğrenmeye çalışıyorlar vs., böyle bir şey de olmamalı yani. En azından temel şeyleri insanlar öğrenmeli yani biz etrafımızda hani eğitim durumu belli olan maddi durumu belli olan arkadaşlarımızdan da görüyoruz hani insanlar esasında anne baba olmanın ne demek olduğunu çok bilmiyorlar yani. Biz dediğim gibi geçen yüzyılda yaşasaydık bunların hiçbirisi dert olmazdı ama bu yüzyılda böyle şeyler gerçekten çok önemli, kimse 4 yaşında tarlaya salınıp büyümüyor yani eskiden öyleydi, eskiden herkes kendi kendine büyüyordu. Ama artık o kendi kendine büyüme devrimi bitti yani insanlar artık kendi kendilerine büyümüyorlar."

Serpil also thinks that not everyone should be a parent: " Some people in my family should not have children, I think it is not necessary to have children just because they got married, families put pressure on this, and there are people who do it just because of necessity. People who can't be parents shouldn't have children." Her husband Sinan agrees:

> " So yes, as Serpil said, after people who are not competent to raise children have children for one reason or another, those children become individuals and a part of the society, you live with them, and they have to live with you. There's also a little bit of that on the social side of things."
>
> *"Yani evet gerçekten Serpil'in dediği gibi, çocuk yetiştirmeye yetkinliği olmayan insanlar şu veya bu sebepten çocuk sahibi olduktan sonra o çocuk bir birey oluyor ve toplumun bir parçası oluyor, siz onunla birlikte yaşıyorsunuz, o da sizinle birlikte yaşamak zorunda kalıyor. Biraz da işin toplumsal tarafında biraz da bu da var."*

Barış also mentioned the license:

> "My family cares a lot about the child, they probably think that to be a family, there must be a child. But if you're asking for me, I think it's more valuable and a bigger responsibility than anyone else thinks. Not just for myself or in my own family, and not just because I thought about not having a child for myself in the future, but that the whole society should not have children, at least people should go through a process such as the ability to have children, the exam to have a child. I think it's an incredibly big responsibility."
>
> *"Ailem çok önem verir çocuğa, bir aile olmak için çocuk olması gerektiğini muhtemelen düşünüyorlardır. Ama benim için soruyorsanız herkesin düşündüğünden de daha değerli ve daha büyük bir sorumluluk olduğunu düşünüyorum. Sadece kendin için ya da kendi ailem içinde de değil ve hani sadece kendim ilerde bir çocuk sahibi olmamayı düşündüğümden dolayı da değil, bütün toplumun çocuk sahibi olmaması gerektiğini, hiç yoktan toplumsal olarak insanların çocuk sahibi olma ehliyeti, çocuk sahibi olma sınavı gibi bir süreçten geçmesi gerektiğini düşünüyorum. Çok inanılmaz büyük bir sorumluluk olduğunu düşünüyorum."*

His wife Nilüfer also agrees: “I totally think so too. Not everyone should have children. If you are not ready for this physically, psychologically, economically, culturally, Would it be a little bad if I said that you should not produce individuals who are not ready for this and pollute the society more?” Banu similarly agrees that there should be education about parenting. “I think parenting is something that should be taught and taught like this: ‘Look, now you will give birth to this, then you will leave’, and I think there should be a compulsory course in every department related to parenting and individual psychology in universities."

Lastly, there are some basic family values such as freedom, standing on one’s own feet, making own decisions that are transmitted to the third generation. When we look at the emotional relationship between the second and third generation, some participants emphasized that their parents tried to change the parenting behaviors that they did not like in their own parents and tried not to apply them to their children. In other words, they tried to apply what they had wished to see from their parents but cannot see during their childhood for their own children. A couple of participants mentioned some basic values and priorities that their parents specifically highlight the importance to their children such as the importance of freedom, standing on one’s own feet, and making own decisions. So, these values are mostly the ones second-generation wished to see from their parents but cannot, so they tried their best to change them.

As Oğuz gives example:

> “They also had constant motivations not to do what their own parents did or didn't do. They say: ‘We experienced it. We experienced such and such things, but look, we did not let you live that experience, or we don't do it to you’, they always had a motivation like that.”
>
> *“Kendi ebeveynlerinin yaptığı ya da yapmadıklarını yapmama şeklinde sürekli motivasyonları da vardı. ‘Biz bunu yaşadık. Şöyle şöyle şeyler yaşadık ama bakın hani size yaşatmadık. Size yapmıyoruz’, şeklinde bir motivasyonları hep vardı.”*

For example, Melis said:

> “First of all, let me say that there is no child pressure from the family, everyone is free to live their own preferences in our family. In this regard, my middle sister, who has two children, has been saying since she was a young girl that I love children so much and want children, so she made her dream came true.

And she has a daughter and a son, she's very happy and has been a really good mother. Since I knew myself, it started with the fact that I was not going to have children since I was 20 years old."

"Önce şunu söyleyeyim, aile tarafından herhangi bir çocuk baskısı yok şimdi, bizde herkes kendi tercihlerini yaşamasıyla özgürdür. Yani bu konuda benim ortanca kardeşim yani iki çocuğu olan var dediğim, onun genç kızlığından beri söylediği şey ben çocuk istiyorum ve çok seviyorum deyip bu hayalini gerçekleştirdi. Ve bir kız ve bir oğlu var çok mutlu ve gerçekten çok iyi bir anne oldu söylediği gibi. Ben kendimi bildiğimden beri, 20 yaşından beri ben çocuk sahibi olmayacağımla başladı."

Melis explained why she thinks that her own mother emphasized the importance of freedom and making one's own decisions.

"I've heard the stories about my mother's mother and father, since I lived with them for a couple of years, I had a chance to observe a little more. They have a very despotic mother, a more modern father line, but their children's opinions are never asked, you know, they have the mentality of whatever we say will be happening. All 4 siblings were raised like that. My mom used to say that 'I don't remember they ever asked our opinion.' Since then, she has promised herself that 'I will not be such a parent, I am not going to do that'. I think that maybe the reason why we are so democratic, or our opinion is asked is because she has not experienced it."

"Annemin annesi ve babasıyla ilgili hikayeleri duydum, onlarla birkaç yıl yaşadığım için biraz daha gözlemleme imkânım oldu. Çok despot bir anne, daha modern bir baba çizgisi var onlarda ama hiçbir zaman çocuklarının fikri sorulmayan hani böyle biz ne dersek o anlayışı varmış. 4 kardeş de öyle büyütülmüş. Annem öyle söylerdi 'bizim hiç fikrimizi sorduklarını hatırlamam' derdi, annem o yüzden de ben birçok şeyi görmedim annemden babamdan 'ben öyle bir anne baba olmayacağım, ben bunu yapmayacağım' diye ta o zamanlardan beri söz vermiş kendine. Belki de bizim bu kadar demokratik olmamızın ya da bu kadar fikrimizin sorulmasının sebebi de kendisinin bunu yaşamadığı için olabilir diye düşünüyorum."

Similarly, Zeynep talked about how her mother's father was an oppressive man, and her mother changed this scenario and provided her freedom. She says "My mother was an unlucky person in terms of having this kind of father, because my grandfather was an oppressive man who valued men at work, but did not value women, and did not allow them to talk." On the other hand, another time in the interview she said: "She would describe my grandmother as a loser or something like that, she never made a sound or something. My mother always used to say that: 'she could not speak, or she cannot show any strength'." Then the participant talked about how her mother behaves differently to her by emphasizing freedom:

> "My grandfather did not let my mother to go to the school after some time, he did not let her study, for example, there was no possibility of not studying for me. On the one hand, she let me very free, as I said, she did not restrict me at all."
>
> *"Dedem annemi hakikatten okutmamış bir yerden sonra okuldan almış ama benim için mesela okumamak gibi bir ihtimal bile yoktu. Bir yandan çok özgür bıraktı dediğim gibi hiç kısıtlamadı."*

Likewise, Gizem talked about how her parents emphasize the importance of freedom, making your own decisions, and standing on your own feet:

> "I mean, there was something about everyone standing on their own feet and owning a house. Of course, it's about their own traumas, my mother wanted to study very much, but because she is the eldest sister and my grandmother gave birth all the time, they needed someone to look after those children. But although my parents are primary school graduates, they are very open-minded, for example, they never said anything to me, you can't do this because you're a girl. My mother always used to tell us: 'you will stand on your own feet, you will study, you will have a profession, you will do whatever you want', or my mother was always say something, 'go as far as you can go, I couldn't go, just go travel, and send your siblings too'. They would be happy when we did what they couldn't do so, it was a success for them."
>
> *"Yani herkesin kendi ayağının üstünde durmasıyla ilgili şey vardı, bir de ev sahibi olmak.. Tabi onların kendi travmalarıyla alakalı, benim annem okumayı çok istemiş ama en büyük kız kardeş olduğu için ve anneannem sürekli doğurduğu için o çocuklara bakacak birisi lazım okutmamışlar. Ama benim annem babam ilkokul mezunu olmalarına göre çok geniş görüşlüler gerçekten bana mesela hiçbir zaman şey demediler işte sen kız olduğun için şunu yapamazsın. Annem bize hep şeyi söylerdi: 'kendi ayaklarınızın üstünde duracaksınız, okuyacaksınız, mesleğiniz olacak, ne istiyorsanız artık onu yapacaksınız,' ya da annem hep şeydi yani 'gidebildiğin kadar uzağa git, ben gidemedim, işte sen git gez, kardeşlerini de gönder' falan filan diye hani hep böyle o şey vardı kendi yapamadıklarını biz yaptıkça onlar mutlu oluyorlardı yani hani onlar için bir başarıydı hani kendi yapamadıklarını bizim yapmamız."*

In the below two examples it is unknown whether there is any pressure from the first generation to the second in terms of oppressive parenting so the existence of intergenerational discontinuity is unknown but there is an intergenerational transmission of these basic values from the second to the third generation. For example, Kardelen talked about how her mother has always talked about the importance of freedom and standing on one's own feet, and making your own decisions:

> "The best thing they do and give me is always be fond of your freedom, always go your own way with what you know, this is what I can say for my mother, take your responsibilities and be free, this is the thing she's been saying since I was a kid, not the words she said only while walking out the door as if she has not raised me like through adolescence and university years. This is how people do it… Since our childhood, my mother had raised us like this, you have responsibilities, stand on your own feet, and take care of yourself, I see it as a big plus. Taking care of your freedom, actually, the biggest feeling I probably had felt even before love."
>
> *"En güzel yaptıkları ve bana verdikleri şey özgürlüğüne her zaman düşkün ol, her zaman kendi bildiklerinle kendi yolundan git annem için böyle söyleyebilirim, hani sorumluluklarını al ve özgür ol, en fazla çocukluğumdan beri söylediği şeydi bu hani ergenlik ve üniversiteye giderken böyle yetiştirmeyip, kapıdan çıkarken söylediği laflar değil. Bir çok insana böyle yapılıyor… Annem çocukluğumuzdan beri bizi böyle yetiştirdi, sorumluluklarınız olsun kendi ayaklarınızın üzerinde durun ve kendinize sahip çıkın diye hani onu çok büyük bir artı olarak görürüm. Özgürlüğünüze sahip çıkın, aslında en büyük şey o herhalde sevgiden önce hissettiğim duygudur yani.."*

Her husband, Miraç, also experienced similar basic values from his parents. He thinks that individuals can freely make their own decisions when their parents do not pressure them about anything, so they can be themselves and it influences the decision-making process of being voluntary childless:

> "There are thousands of factors that drive people away, actually, these factors exist for all people, for the whole society, but most of the people actually say to themselves: 'my friend, my family wants this, we got married, won't we have a child?' They do accordingly the things they were taught, so staying out of this cycle is actually something our families gave us because our families did not put any pressure on us in this regard."
>
> "*Binlerce aslında uzaklaştıran faktör var insanları esasen, bu uzaklaştıran faktörler bütün insanlar için, bütün toplum için var ama insanların büyük bir kısmı esasında kendi kendine diyor ki: 'ya arkadaş benim ailem böyle istiyor, benim arkadaşlarım böyle istiyor, biz evlendik bundan sonrasında çocuğumuz olmayacak mı? Bir takım ona öğretilen şeylerle yola çıkıyor. Bu döngünün dışında kalmak da esasında bize ailelerimizin verdiği bir şey çünkü ailelerimiz bize bu konuda hiçbir baskı yapmadı."*
>
> "When they didn't put pressure on us, we could actually think more freely about everything, this is something related to religion, something related to the place where you will live, something to do with the spouse you will find, when you are not under pressure, you can be more like yourself, you can think more freely and as a result, actually you start to choose a life you can be a little more like yourself. You get the freedom to live your own life, not the life of others. Maybe this is most of the things that bring us both together, because maybe if

the family was more oppressive or tied to stereotypes, we could say: ‘yes, okay we will have, just shut up, as long as they go away’.”

“Şöyle baskı yapmadıklarında aslında her konuda daha özgür düşünebiliyorduk, bu dinle de alakalı bir şey, bu yaşayacağınız yerle de alakalı bir şey, bulacağınız eşle de alakalı bir şey, siz daha çok baskı görmediğinizde daha kendiniz gibi olabiliyorsunuz, daha özgürce düşünebiliyorsunuz ve bunun sonucunda da aslında daha biraz daha kendiniz gibi olabileceğiniz bir hayat seçmeye başlıyorsunuz. Başkalarının hayatını değil, kendi hayatınızı yaşama özgürlüğüne kavuşuyorsunuz. Bizim ikimizi de belki ortak noktada buluşturan şeylerin çoğu budur yani, çünkü belki aile daha baskıcı veya kalıplara bağlı olsaydı, şunu söyleyebilirdik biz de: ‘evet ya tamam artık sussunlar yeter ki de bizim başımızdan gitsinler’ diyebilirdik.”

CHAPTER 4

DISCUSSION

The current study aimed to investigate the role of intergenerational transmission on the decision-making process of voluntary childless married couples. Although in the literature, some studies investigated the decision-making process or the motives behind voluntary childlessness, to our knowledge, there is not any detailed study that investigated the role of intergenerational transmission on the decision-making process. Three main categories emerged as a result of grounded theory analysis using MAXODA. These are (1) family factors as a source of repetitive scenarios, (2) intergenerational discontinuity: Breaking the social norm of child-centered living as changed scenarios, and lastly, 3) having a child in the modern world is a decision that needs serious consideration. Each category will be discussed based on the existing literature in the following sections.

4.1 Family Factors as a Source of Repetitive Scenarios

According to Bowen, "families repeat themselves" (McGoldrick et al., 2008, p.15). The important incidences, relationship patterns, certain issues that happened in one generation might tend to be the same issue for the next generation. Bowen identified this as a 'multigenerational transmission of family patterns'. The underlying hypothesis is that "relationship patterns in previous generations may provide implicit models for family functioning in the next generation" (p.15). Thanks to genograms, today we can use them for assessment to obtain detailed information about a family's functioning, structure, and relationship patterns that are transmitted or changed over generations. The systems approach contains comprehension of both the current and historical context of the family. Although through the standard genogram their lives investigated within an individual, family, community, and larger context in terms of both horizontal and vertical way (Carter et al., 2014, p.7), for the scope of this study, vertical stressors (the intergenerational transmission of societal history, politics, sexism, racism, violence, family emotional patterns, triangles, myths, genetic abilities/ disabilities or beliefs over the generations) are mostly investigated and highlighted with the results. However, many participants were also talked about how the political climate, economic hardship, educational standards of the current situation in Turkey and climate change, difficulties to find safe food, natural disasters, terrorism, violence

against women in the world, and also unemployment or the future career wishes have an effect for the decision-making process as horizontal stressors.

Family factors can be identified as to whether any physical and genetic illness or predisposition that family member(s) has, and anxiety/panic problems manifesting as a feeling of insecurity in the world or the belief that the world is not a safe place that family member(s) has within second and/or first-generation, family emotional patterns and triangles, family beliefs, values, priorities and parentification experience. First of all, intergenerational transmission of physical illness, for instance, cardiovascular disease is a common phenomenon in the literature, it is known that shared genetics and ecological context might account for the strong intergenerational links of cardiovascular disease between parents and children (Jensen, Duke, Harris, Hotz, Perreira, 2020). Since death can be experienced at any time with unexpected heart attacks, or with progressive health problems that might increasingly cause mental dysfunction such as Alzheimer's disease, (Carter et al., 2014, p.341), it may increase future uncertainty which leads to anxiety of possibility to leave the loved ones, being afraid of not being able to see their children when they grow up. So, individuals who have such intergenerational transmitted diseases may choose voluntary childlessness mostly because of the circumstance of their health. If their health conditions are stabilized and predictable, their decision may change as the decision making is a process, couples can rethink being a parent.

Secondly, family factors can influence and increase the anxiety of intergenerational transmission which is the possibility that the child would be born with some genetic disorders like mental retardation or predisposition such as aggression, which accounts for both genetic and environmental factors considered. Many studies investigated the role of both genetic and environmental factors on aggression, for example, they found that "genetic background is estimated to account for approximately 40–50% of the risk of aggressive behavior" (Rhee and Waldman 2002; Brendgen, Vitaro, Boivin, Dionne, & Perusse. 2006) so the other half is about environmental factors. Likewise, mental retardation is also highly influenced by genetic and environmental factors such as parent-child interaction and child-environment transaction (Hodapp, 1997). When we look at the literature, it is found only in one study, participants mention this possibility as an underlying reason for

being voluntary childless (Settle &Brumley, 2014). Although the participant who mentions this possibility does not declare any parental history of aggression or mental retardation, it is assumed that they can think about such possibilities for the future due to the level of anxiety felt by the individual.

Thirdly, anxiety or panic issues that one family member experiences may be transmitted over generations through both genetic and environmental/cultural factors. When we look at the results some participants mentioned the history of their parent's anxiety or panic issues both for the first and second generation and then expressed their own anxieties for the child's future in general, particularly the side of the uncertainty of the future and life conditions for the future world as an underlying reason of being voluntary childless. When we look at the intergenerational transmission there is a moderate genetic transmission from parents' anxieties to a child (Bolton et al., 2006) and adolescent anxiety (Ask et al, 2014). On the other side, non- genetic influences are also another side of the coin. According to Eley and her colleagues (2015), they identified three underlying direct mechanisms of the environment on intergenerational transmission. First of all, parental anxiety itself might lead to such a rearing environment that is provoking to develop anxiety in offspring. Through vicarious learning, children might learn what to fear and worry about, so parents' reaction towards ambiguity or mildly threatening incidence might increase their children's understanding of the world as an unsafe place. Secondly, since it is known that parenting might be repeated through the mechanism of modeling and internal working models (Branje, 2020), parents may perform negative parenting behaviors which leads to the development of anxiety for children (Eley et al, 2015) such as overcontrolling and perfectionism (Affrunti & Borden, 2014). Lastly, there might be the anxiety of the child which may result in more anxious parenting styles which exaggerate the child's anxieties, in other words, the anxiety level of offspring may affect what kind of parenting he/she receives. Therefore, through both environmental and genetic mechanisms, intergenerational transmission of anxiety and panic issues may result in participants tend to have a more pessimistic view about the future such as 'The world is going to a bad place', 'Nothing in the world goes perfectly', 'Will I be able to offer my child a good future?' that may affect their decision-making process of being voluntary childless.

Fourthly, families may form many different relationship patterns that can be repeated over generations mostly through the mechanism of emotional triangling (Bowen, 1978, p.343). Emotional triangling contains family attitudes, expectations, labels, secrets, issues that families experience. Within the family, individuals might be very close with parents like experiencing emotional fusion at one of the extreme side or on the other side, they might have a very distant relationship such as cutting off from each other or feeling somewhere in between" (McGoldrick et al., 2008, p:17-18). So, fused, close, distant, conflictual, hostile, or cut-off relationship patterns can be seen in families. One of the most common triangle relationships can be seen as being close with one parent and distant with another (McGoldrick et al., 2008, p.169). It is important to remember that the closeness with one family member influences and increases the distance with another person, so their functioning depends on each other.

To understand families, it should be tracked down how triangular relationships in one generation persist over time. If the same kind of emotional relationship pattern is repeated over generations, this would be the intergenerational transmission of triangles. When we look at the results, it is found that participants have a similar triangular relationship with their parents likewise their parents had experience with their own parents. For example, there is a very common triangular relationship pattern; children are in a close relationship with one parent but distant and conflictual with the other parent, so children should solve their problem on their own or with the close parent (McGoldrick et al., 2008, p.172). It is thought that in a type of triangular relationship, mothers might become the buffer or bridge between father and child. Similar to the results, emotional triangular relationships don't just happen between the child and the two parents, indeed, as it can be seen within all family members with different forms like two children and one parent. For example, a mother can be close with her son but distant with her daughters like the similar relationship pattern with her mother and brother while they had grown up. It is thought that this type of triangular relationship can be also explained by the intergenerational transmission of patriarchal gender attitudes; while having a boy may be seen as valuable which also increases the status of the mother within society, having a girl may be devalued in society. So, they are likely to repeat the patriarchal gender beliefs of previous generations. Firstly, according to Bowen, in general, the underlying mechanism of a

triangular relationship is anxiety (Brown, 1999) so the third party comes into the relationship to give anxiety a way to flow. He continues to explain if these types of alliances or conflicts between family members are not tried to change, they can reenact themselves in cross-generation (McGoldrick et al., 2008, p.169). Bowen states that projection might be taken place when two family members do not want to deal with the problem they have, they project their feelings into the third party (1978, p.573). The projection may occur in the form of valuation, criticism, helpfulness, worry, or distance (Huang & Rohlfing Pryor, 2018). According to him, the family projection process represents the process of the development of individuals' symptomology when they had experienced their families' anxieties about relationships (Brown, 1999) so in this way, individuals who had exposed to projection tend to reenact this pattern in the next generation (Huang & Rohlfing Pryor, 2018). Secondly, parenting might be transmitted through generations (Branje et al, 2020). Next generation might repeat the previous generations' observed parenting styles through modeling (Patterson, 1998). In other words, intergenerational transmission of similar emotional relationship can be also due to limited behavioral repertoire that a family member has since the individual was experienced certain patterns by own family members and do not know how to behave differently. Moreover, according to attachment theory, experienced parenting in childhood/adolescence may affect individuals' internal working models and development which influence their behaviors (Bowlby, 1988). So, how the intergenerational triangular relationship patterns might affect the decision-making process is that the experiences of emotional relationship that individuals went through in childhood and adolescence, may increase their sense of parenting as something that requires very big responsibility as if it requires giving their lives. Participants may have the anxiety to repeat/ project similar emotional relationships with their future hypothetical children, or they afraid to repeat parenting behaviors that their parents reflect upon them through the process of modeling or internal working models.

The last family factor as a source of repetitive scenarios is the participant's parentification experience. As it was mentioned in the introduction, parentification takes place in the form of emotional and/or instrumental (Borchet et al, 2018). In the current study, participants had mentioned about their instrumental (doing household chores, taking care of the younger sibling, earning money) and emotional

parentification (worrying about family member's mood, feeling a duty to satisfy their emotional needs) experiences. During the transition process from adolescence into adulthood, the level of dependency of the child should be decreased so that child becomes independent and pass the separation-individuation process as healthy unless parents appraise this individuation process as threatening for the balance of the family, the adult and child roles can be reversed, the child can be made to feel guilty about individuation, therefore, parentification may occur (Brochet et al, 2018). So, the child is expected to stay in the family to perform the parent's responsibilities. According to Kerr and Bowen (as cited in Brown, 1999), this kind of relationship is described as emotional fusion "a sense of intense responsibility to feel one's reactions". Another way of parentification might occur especially during the process of divorce when there is an under responsible parent, so the child is expected to fill the gap, perform adult roles, so the whole family is reorganized to fill in the responsibilities of dysfunctional of one parent (McGoldrick et al., 2008, p. 158).

Participants have also mentioned their own parent's instrumental parentification experiences. So, it is important to know that when the individual had experienced parentification through childhood years, according to Schier (2010, 2014) (as cited in Borchet et al., 2018), it is likely that those individuals may repeat this kind of abnormal behavioral patterns in the next generation when they become a parent through the intergeneration transmission of parenting (Borchet et al, 2018). So, Schier (2010) (as cited in Borchet et al., 2018) states that parents from second-generation might reenact the parenting strategies from first-generation, then the third generation is expected to take care of their own parents so that 'the debt' of first-generation parents to second-generation parents should be compensated by the third generation. In other words, the pattern of responsibility for care from one's own children is transmitted and reenacted by the individual whom him/herself as a child had to carry that for his/her parents (Barnett & Parker, 1998).

Individuals who experienced parentification may choose to be voluntary childless (Lackie, 1983). According to Mollen (2006), early experiences with childcare such as babysitting, other household chores increase aversion to motherhood. it is so understandable that when children- mostly elder kids in the family- are assigned roles that should not be expected of their age, they might be overwhelmed by these early

childhood experiences, or it might increase their negative perception of parenthood (Borchet et al, 2018).

4.2 Intergenerational discontinuity: Breaking the social norm of child-centered living as changed scenarios

Social norms can be described as the societal standards that people who live in that community create and recreate these values through the effects of cultural, economic, and political ideas throughout history. These values are the vertical stressors that can be transmitted over generations, for instance; racism, sexism, classism, violence, and religious beliefs are some of the historical issues that affect both what to be social norms and families as they pass through their life cycle (McGoldrick et al., 2014, p.7). When we look at the past century, the life cycle patterns of families had drastically changed. Today, there are a lot of different family types such as single parenthood, unmarried cohabitation, LGBTIQ+ families, unmarried motherhood, and voluntary childlessness as a result of the developments of the human rights movement especially the women's rights movement, general socio-economic advancements although there are still high encouragements on fertility by governments' social policies like giving monetary incentives and also by societal pressure on individuals. In this study, the social norm of child-centered living is used not only referring to the the societal norm that parent's lives generally based on their children's welfare and priorities but also referring to the expectation that every family should have a child and the perception that at least they want to have a child. Therefore, it can be seen three general scenarios that families are expected to experience. Firstly, they are expected to be married and have a child, so the road is predetermined. Secondly, the child is the one who makes family a family, without having a child, they are identified as couples or lovers rather than a family. Lastly, they need to put their lives at the back burner when raising a child. However, through intergenerational discontinuity, individuals may change these scenarios by transforming the social values and regarding themselves as voluntary childless families.

According to the results, the first changed scenario is the road predetermined, you get married and have a child. Most of the participants' parents did not question whether they want to have a child or not, participants were mostly unplanned babies in terms of preparing themselves for a long time to have a baby. This predetermined

road is like a loop, you meet the societal expectations of marriage, having a child, then giving birth to a second child as a sibling for the first, etc, so, in this loop, people may not really think about their life goals and wishes. Participants' statements on their disagreement on the idea that you get married and have a child are the only accepted road as their parents had experienced, they reveal that having a child or not should be a matter of choice as an intergenerational discontinuity. So, they do not repeat this scenario by trying to question whether they really want a child and/or what kind of life they want to live, what kind of future they want, etc. When we look at the mechanisms of breaking the cycle, family system theory proposes that individuals socialize into patterns of family life which may affect either the internalization of family values, or they can challenge the family beliefs about the world around them, so it is an active system that family members affect and affected by each other (Fingerman & Bermann, 2000). For example, they may observe their parents' lives, how their values and priorities affect the way they live, and they can make an inference to their own lives. Moreover, families' behaviors differ from each other since all have their own different histories and patterns of behavior, these beliefs determine what kind of patterns are used within the family and also form family members' acts outside the family (Fingerman & Bermann, 2000). At the level of the larger system, although we live in a pronatalist society that promotes fertility and isolates voluntary childless families as deviant subjects, cultural norms are expanding to accommodate more diversity. So, voluntary childless individuals can challenge the negative attribution attached to their minority status into positive valuation and break the vicious cycle of predetermined parenthood as if no other reality was possible (Matthews & Desjardins, 2017).

The second changed scenario is the idea that it is the child that makes a family a family. A lot of participants mentioned how their notion of family is different from their parents because their family members from previous generations think that what makes a family a family is a child, in order words, the family would be deficient without a child, as a result of it, they are generally subjected to the societal pressure as mandatory parenthood but where most of the responsibility is particularly on women's shoulder. Since motherhood is seen as the main cornerstone and final fulfillment for womanhood identity (Gillespie, 2003), they are more likely to be stereotyped as psychologically flawed, selfish, pursue unfeminine and unhealthy lifestyles. As an

intergenerational discontinuity of value, participants do not accept that they are not a family without a child, they emphatically state that they are a family and happy about it. Moreover, it is also found that a lot of couples in the study have pets such as dogs or cats. As similar to some research findings (Carmichael & Whittaker, 2007), pets can become child substitutes, most of them talked about how they see their pets as their children and grandchild for their parents, but it was mostly not accepted. When we look at the mechanisms, the feminist movement, women's participation in the labor market, the rise of sexual reproductive opportunities shape the social change factors (Gillespie, 2003). As it was mentioned, the rise of socio-economic developments, the women's rights movement, also the LGBTIQ+ movement, the diverse forms of family are getting accepted by communities. On the other hand, pronatalism is still influential in individuals' lives since it affects the government policies and what is normal and healthy (Heitlinger, 1991), especially women are encouraged to stay at home and raise child in the private sphere as compatible with their gender role expectation. Since participants are highly educated, it also might be influential to break the vicious cycle of this mandatory parenthood understanding and reject normative family form based on child-centered living.

Lastly, the third changed scenario is putting your life on the back burner. A lot of individuals talked about how the notion of parenthood for their parents is associated with devoting your life to children and sacrificing a lot of things that you would like to do. It is like having an identity based on children's welfare, so motherhood is seen as equal with womanhood while fatherhood is associated with manhood. They emphasized the huge difference between people before a child and after a child since children substantially influence the way parents live. They mentioned how their parents explicitly talked about the disadvantages of having a child or their impressions on their parents' implicit expression about negative consequences like limited social life. At this point, individuals may observe there are some increased costs of childbearing such as lifelong responsibility, limited social life and loss of independence (Settle &Brumley, 2014), and due to unrealistic expectations, that they might be expected to be around of the child all the time, take care of their all needs (Brooks, 2012, p. 11). Although participants mentioned both their parents' devotion to themselves, some participants also highlight their mothers. There are unrealistic

societal expectations of motherhood that are hard to achieve; they are expected to be the main caregiver for all needs of children, they might be a scapegoat for the child's negative behaviors or attitudes as well. When we look at the mechanism of this changed scenario, there might be a radical rejection of motherhood and the responsibilities that are associated with motherhood (Gillespie, 2003). Motherhood is perceived as a loss of identity due to overwhelming responsibility. Therefore, in contrast to their parents, they break the cycle of child-centered living by rejecting parenthood. Since families are one of the major sources of the transmission of social values, practices for the child (Min et al, 2012), these values -the goals, ideals, and standards of the family- may be vertically through explicit or implicit ways by non-verbal rules, taboos, behaviors transmitted over generations (McGoldrick et al., 2008, p.16). Intergenerational discontinuity of this scenario might be the result of observation of the dissatisfaction of their parents' experience in terms of costs of childrearing. So, as Veever (as cited in Hee Lee, 2011) states that individuals may also observe how their own families feel about being a parent, the things they sacrifice or dissatisfaction about having and raising a child it may increase their negative sense of future projections about parenting, they think they can experience similar things with their parents since they do not want to repeat similar life experiences, it affects their standing point as a voluntary childless couple as well.

4.3 Having a child in the modern world is a decision that needs serious consideration

Through globalization, industrialization, urbanization, technological developments, improvements in public health, advancements of legal rights, and economic and social welfare policies and politics, the concept of parenting (Ulferts, 2020) and the value of the children has changed though in a way of increasing costs and decreased benefits (Kağıtçıbaşı &Ataca, 2005). Today, the importance of parenting on a child's welfare and development is better understood. The understanding of parenting is changing so, the perception of parents' responsibilities on raising a child and the standards of being a good parent are increased (Park, 2005). Changing value of the child, the implication for the care of the elderly, changing the understanding of parenting along with high perceived parenting skills in the modern world brings the idea that having a child becomes a serious decision to be considered.

Firstly, some participants mention how historically the value of the child has changed in Turkey similar to the literature. Kağıtçıbaşı and Ataca (2005) state that while the psychological value of the child increases, the utilitarian/economic value of the child decreases. Both considering the middle-high socio-economic status of the participants from highly educated class who lives in urban cities rather than a rural area, and also the general improvements of economics and increased urbanization for three decades in Turkey can explain the decreased economic but increased psychological value of the child. Subjects also mentioned the high economic value of the child in the times their families grow up in the rural area. In those times, children are regarded as individuals who contribute to the family economy by working in the labor market or doing household chores (Kağıçtıbaşı, 1982, p. 65), in fact, it shows how common child labor was seen as normal especially for parents who were in low-socioeconomic class who need serious contribution to the family's economic welfare (Borchet et al, 2018). Therefore, the historical difference between the generations shows there is an intergenerational discontinuity in terms of the value of the child. According to some participants, what at child means for them is different from their parents; the child evokes so much burden in terms of both material and spiritual while raising a child rather than talking about the perceptions of benefits of having a child, like the sense of pride, joy, companionship, and accomplishment. Secondly, the old-age security value of the child has also decreased that participants were not agreed with their parents in terms of having a child so that he/she can look after them when they are old. The general economic advancements and the opportunity of institutional support decrease the dependency to children for elderly care especially for individuals who live in metropolitan centers (Kağıtçıbaşı, Ataca, 2015) as similar with the participants. Urban lifestyles provide better opportunities to take advantage of old-age security resources like social security services and pensions (Kağıtçıbaşı &Ataca, 2005). Moreover, the dependency age of children to their parents increases as a result of longer education opportunities in the modern world. These situations make the material contributions of children less significant with corresponding decline economic value of the child but high costs of raising a child.

Secondly, the increased psychological but the decreased utilitarian value of the child and higher costs of raising a child correspondingly higher dependency age

(Kağıtçıbaşı & Ataca, 2005) are related with changing understanding of parenting greatly increases perceived responsibility for individuals. Some participants stated that there is a difference between parenting and physical/material caring of children; at times their parents were raising them, and also one generation before, these terms were interwoven with each other, children were mostly growing on their own, generally their parents were not really pondering child's education and development while in the modern world, 'the era of growing up by oneself' is over, in fact, child education, child's social, cognitive and emotional development is important as much as their physical development. On one side, as urbanization and industrialization have increased, the number of extended family living is also decreased in a way that nuclear family becomes more common (Brooks, 2012, p. 31), which in turn decrease the informal social support and safe environment to raise a child, they are required to take all responsibility for child's caring and welfare (Pimentel, 2016). On the other side, globalization and technological investments provide individuals massive digital networks that they can educate themselves on child development (Ulferts, 2020). The increased educational and economic development also enhance people to use resources to raise their children, so modernization gives ways to increase parental investment in a child's education (Gibson &Lawson, 2011). When we look at the legislation and the development of child's rights from 1979 to 2018, the number of countries who have equivalent legislation increased to 54 which may decrease how much parents use physical discipline and authoritarian parenting style (OECD, 2019). When we look at the perspective of the intergenerational discontinuity of parenting, individuals try to change the previous generation's parenting behaviors, in other words, they might not repeat the vicious cycle. Parents are now more expected to spend quality time with their children on child development, control their behaviors outside the home (Collishaw, Gardner, Maughan, Scott & Pickles, 2011). The impact of parenting on child development is better appreciated (Rodrigo, Byrne & Rodriguez, 2014), so, the attributions of good parenting have changed. It also brings the issue of society's unrealistic expectations for parents especially for women (Brooks, 2012, p.11). Since women are expected to be the main caregiver for children, they are mostly the ones judged, perceived responsible to fulfill the child's all needs such as physical caring, love, playtime, healthy child development in general. However, in the current study, it

is found that both some men and women think that parenting is a serious job, requires commitment, knowledge on child's social, educational, cognitive, and emotional development, necessary skills both material and spiritual. Therefore, these societal expectations on parents cause tremendous stress and aversion on parenting, increase their standing as being voluntary childless couples. So, while some individuals think of themselves as proficient but unwilling to be a parent because of tremendous responsibility, but some think that they think they are not suitable, or they have a doubt about how they would be a parent. Since participants perceive parenting that needs serious equipment, some of them believed that not everyone should be a parent, indeed they stated people who are lack of proving quality education, welfare, and development for a child should not be a parent, there should be a requirement of parenting license like getting a driving license.

Lastly, there are some basic values such as the importance of freedom, standing on one's own feet, and making own decisions that parents try to transmit to the next generation. Some participants talked about how their parents tried to tell them the importance of freedom, standing on one's own feet, and making their own decisions. Likewise, the intergenerational transmission of disadvantages of having a child, are also vertical stressors as values of families that can be transmitted over generations (McGoldrick et al., 2008, p.16). It is found that these basic values as family priorities that can be both intergenerationally transmitted through generations, also there can be intergenerational discontinuity for the second generation. Children in the second generation who had experienced oppressive parenting in which their parents do not ask their opinions, when these children become parents might change this parenting pattern into providing a more democratic environment or highlighting the importance of freedom, standing one's own feet and making own decision. Moreover, there is a general trend that today's modern parents regarded themselves as less authoritarian and more authoritative or permissive than their previous generation (Campbell & Gilmore, 2007). So, there is a general shift from more authoritarian parenting to more democratic child-rearing styles. Findings are similar to the literature, through the effects of modernization in Turkey, individuals who have high education, socio-economic status, secular values together with high tolerance acts more egalitarian values towards their children, they have low material expectations toward their

children, give importance on children's autonomy, personal life and academic success (Yavuz & Güllüpınar, 2019). This intergenerational discontinuity can be also explained by '*family change theory'* since Kağıtçıbaşı proposed a '*family model of emotional interdependence'*, as a synthesis between the family model of interdependence and the family model of independence (Mayer, 2013; Kağıçıbaşı & Ataca, 2015). According to that, the importance of personal autonomy increased and due to modernization processes, material dependency and traditional hierarchies are decreasing while the importance of emotional closeness and relationship orientation for family continues to matter. The common perception of autonomy (especially women's) as a threat to group functioning is not valid anymore, indeed, it is regarded as an asset to achieve success at the workplace in the modern world. Thus, the family model of psychological interdependence highlights personal autonomy, proper behaviors at the same time, and the value of emotional relationships in the family.

4.4 Clinical implications

The current study has some important clinical implications. Firstly, since voluntary childless individuals may be subjected to judgmental thoughts by their surroundings, counselors or psychotherapist should be aware of the effect of pronatalist society on these families' lives, in other words, mental health workers should inquire information whether they experience any stigmatization or isolations, the coping mechanism and the social support system they have. Psychoeducational intervention can be made at this point to increase clients' awareness on whether the choice comes from a healthy differentiation of self or due to emotional reactivity against their family members' expectations since if the second is valid, clients may be subjected to more emotional pressures from their family-of-origin to change their mind (Gold, 2012). Secondly, as Mollen (2006) mentions, since some developmental models and family life cycle models approach childbearing and raising as if it is the only normal pathway in adulthood, mental health workers should be aware of their own biases, presumptions, and perhaps judgments about voluntary childless individuals by knowing that being voluntary childless is normal and there is not necessarily an underlying negative experience, they may come from healthy families with healthy relationships together with great childhood memories. Thirdly, being voluntary childless should be discussed in the context of regarding the larger system,

family and individual stressors, and the role of intergenerational transmission. Counselors and psychotherapists should know especially the larger system that has a significant effect on our decisions such as terrorism, violence, epidemics, climate change, world overpopulation, the issue of accessing safe food, and also the specific factors of living in Turkey. Moreover, we are human beings who are curious about the factors that may underlie our actions, attitudes, and values, we want to know ourselves, the way we do and think. Genograms at this point can be a very useful tool not only for as assessment but as an intervention for voluntary childless couples in family therapy. It provides clients to know what the role of intergenerational transmission on the decision-making process might be in terms of transmission of values, parenting, physical/mental or genetic predispositions, the effect of parentification, or triangles or what the things are trying to be done or thought differently (e.g. societal norms, the value of the child, the notion of parenting) from previous generations as an intergenerational discontinuity.

4.5 Limitation and future research

There are a couple of limitations to this study. Firstly, the participants are from high educated social class, married -although it was intentional- and correspondingly heterosexual which restricts heterogeneity. Secondly, although it is argued that to examine the effect of social stigmatization and investigate lived experiences of voluntary childless couple, they should have been married at least 5 years but due to difficulty to find subjects, the couples who have been married for a shorter period of time were recruited. Thirdly, since genogram requires experience and knowledge in the clinical field and it was the first experience of a genogram-based clinical interview for the researcher, some information could not be retrieved or analyzed further. For future research, although this study is significant in terms of approaching the decision-making process as dyadic, there can be conducted studies that focus on specific men to understand their role in the process and specific motivations. Secondly, there might be studies that can be conducted with different family forms such as cohabited but unmarried voluntary childless couples who are identified themselves from different sexual orientations.

4.6 Conclusion

To sum up, according to the investigation on the role of intergenerational transmission on the decision-making process of voluntary childless married couples, three general tentative conclusions can be made. First is that there might be an intergenerational transmission of physical illness, genetic predisposition or diseases, anxiety/panic issues, parenting practices, triangles, parentification, and basic values that are transmitted over generations influence the decision-making process of being voluntary childless. Secondly, families may try to pass on to the next generation the behaviors, environments, values, and beliefs that they wanted to see in their own families but could not see while they were growing up. These transmissions might affect the way of thinking, priorities, presumptions about possible parenting, and avoid the possibility of repetition of the experience in their own family of origin. Similarly, individuals can choose not to pass on parenting behaviors, family atmosphere, values that they had experienced but would wish not to experience in their own family to the next generation by breaking the vicious cycle of patterns and putting their priorities and beliefs at first. Thirdly, through the socio-economic developments, the type of value of the child and understanding of parenting has drastically changed in a way that perceived responsibilities as a parent, cost of raising a child together with the dependency of the child to the parents has increased which in turn influence fertility rates to decrease.

REFERENCE

Affrunti, N. W., & Woodruff-Borden, J. (2014). Parental Perfectionism and Overcontrol: Examining Mechanisms in the Development of Child Anxiety. *Journal of Abnormal Child Psychology*, *43*(3), 517–529. https://doi.org/10.1007/s10802-014-9914-5

Allan, G. (1980). A note on interviewing spouses together. Journal of Marriage and Family, 42, 205-210.

Arkar, H. ve Şafak, C. (2003). Farkındalığı arttırmada genogram kullanımı. Türk Psikoloji Yazıları, 6(11), 21-31.

Ask, H., Torgersen, S., Seglem, K. B., & Waaktaar, T. (2014). Genetic and environmental causes of variation in adolescent anxiety symptoms: A multiple-rater twin study. *Journal of Anxiety Disorders*, *28*(4), 363–371. https://doi.org/10.1016/j.janxdis.2014.04.003

Avison, M., & Furnham, A. (2015). Personality and voluntary childlessness. *Journal of Population Research*, *32*(1), 45–67. https://doi.org/10.1007/s12546-014-9140-6

Barnett, B., & Parker, G. (1998). The Parentified Child: Early Competence or Childhood Deprivation? *Child Psychology and Psychiatry Review*, *3*(4), 146–155. https://doi.org/10.1017/s1360641798001695

Berger, R. (2013). Now I see it, now I don't: researcher's position and reflexivity in qualitative research. *Qualitative Research*, *15*(2), 219–234. https://doi.org/10.1177/1468794112468475

Blackstone, A., & Stewart, M. D. (2012). Choosing to be Childfree: Research on the Decision Not to Parent. *Sociology Compass*, *6*(9), 718–727. https://doi.org/10.1111/j.1751-9020.2012.00496.x

Bolton, D., Eley, T. C., O'connor, T. G., Perrın, S., Rabe-Hesketh, S., Rıjsdıjk, F., & Smıth, P. (2006). Prevalence and genetic and environmental influences on anxiety disorders in 6-year-old twins. *Psychological Medicine*, *36*(3), 335–344. https://doi.org/10.1017/s0033291705006537

Borchet, J., Lewandowska-Walter, A., & Rostowska, T. (2018). Performing developmental tasks in emerging adults with childhood parentification – insights from literature. *Current Issues in Personality Psychology*, *6*(3), 242–251. https://doi.org/10.5114/cipp.2018.75750

Bowen, M. (1966). The use of family theory in clinical practice. Comprehensive Psychiatry, 7(5), 345–374. https://doi.org/10.1016/s0010-440x(66)80065-2

Bowen, M. (1978). *Family Therapy in Clinical Practice.* New York: Jason Aronson, Print.

Bowlby, J. (1988). *A secure base: Parent-child attachment and healthy human development.* Basic Books

Branje, S., Geeraerts, S., de Zeeuw, E. L., Oerlemans, A. M., Koopman-Verhoeff, M. E., Schulz, S., Nelemans, S., Meeus, W., Hartman, C. A., Hillegers, M. H. J., Oldehinkel, A. J., & Boomsma, D. I. (2020). Intergenerational transmission: Theoretical and methodological issues and an introduction to four Dutch cohorts. *Developmental Cognitive Neuroscience*, *45*, 100835. https://doi.org/10.1016/j.dcn.2020.100835

Brendgen, M., Vitaro, F., Boivin, M., Dionne, G., & Pérusse, D. (2006). Examining genetic and environmental effects on reactive versus proactive aggression. *Developmental Psychology*, *42*(6), 1299–1312. https://doi.org/10.1037/0012-1649.42.6.1299

Brown, J. (1999). Bowen Family Systems Theory and Practice: Illustration and Critique. *Australian and New Zealand Journal of Family Therapy*, *20*(2), 94–103. https://doi.org/10.1002/j.1467-8438.1999.tb00363.x

Bowen, M., 1978. Family Therapy in Clinical Practice, NY and London, Jason Aronson.

Bray, R. and A. Dawes (2016), “Parenting, family care and adolescence in East and Southern Africa: An evidence-focused literature review”, Innocenti Discussion Paper, Vol. 2016-02, pp. 1-74, https://www.unicef-irc.org/publications/856-parenting-family-care-and-adolescence-in-east-and-southern-africa-an-evidence-focused.html (accessed on 12 July 2021).

Brooks, J. B. (2013). *The process of parenting*. McGraw-Hill.

Burman, B. & Anda, D. (1986). Parenthood or nonparenthood: A comparison of intentional families. *Lifestyles*, *8*(2), 69–84. https://doi.org/10.1007/bf01553339

Callaghan, J. E. M., Alexander, J. H., Sixsmith, J., & Fellin, L. C. (2018). Beyond "witnessing": Children’s experiences of coercive control in domestic violence and abuse. *Journal of Interpersonal Violence*, *33*(10), 1551–1581.

Callan, V. J. (1986). Single women, voluntary childlessness and perceptions about life and marriage. *Journal of Biosocial Science*, *18*(4), 479–487. https://doi.org/10.1017/s0021932000016497

Campbell, J., & Gilmore, L. (2007). Intergenerational continuities and discontinuities in parenting styles. *Australian Journal of Psychology*, *59*(3), 140–150. https://doi.org/10.1080/00049530701449471

Carmichael, G. A., & Whittaker, A. (2007). Choice and circumstance: Qualitative insights into contemporary childlessness in Australia. *European Journal of Population / Revue Européenne De Démographie*, *23*(2), 111–143. https://doi.org/10.1007/s10680-006-9112-4

Carroll, L. (2000). *Families of two.* Philadelphia, PA: Xlibris Corporation.

Carter, B., & McGoldrick, M. (1998).The expanded family life cycle: Individual, family, and social perspectives (3rd ed.). Boston, MA: Allyn-Bacon.

Charmaz, K. (2006). *Constructing grounded theory: A practical guide through qualitative analysis*. Thousand Oaks, CA: Sage.

Collishaw, S., Gardner, F., Maughan, B., Scott, J., & Pickles, A. (2011). Do Historical Changes in Parent–Child Relationships Explain Increases in Youth Conduct Problems? *Journal of Abnormal Child Psychology*, *40*(1), 119–132. https://doi.org/10.1007/s10802-011-9543-1

Cooper, P. E., Cumber, B., & Hartner, R. (1978). Decision-making patterns and postdecision adjustment of childfree husbands and wives. *Alternative Lifestyles*, *1*(1), 71–94. https://doi.org/10.1007/bf01081972

Corin, M., Liefbroer, A. C., & Gierveld, J. J. (1996). It takes two to tango, doesn't it? The influence of couple characteristics on the timing of the birth of the first child. *Journal of Marriage and the Family, 58*, 117-126.

Craig, L., A. Powell and C. Smyth (2014), "Towards intensive parenting? Changes in the composition and determinants of mothers' and fathers' time with children 1992-2006", The British Journal of Sociology, Vol. 65/3, pp. 555-579, http://dx.doi.org/10.1111/1468-4446.12035.

Creswell, J. W. (1998). Qualitative inquiry and research design: Choosing among five traditions. Sage Publications, Inc.

DeGenova M. K., & Rice, F. P., (2005). *Intimate Relationships, Marriages, and Families.*

Doepke, M. & F. Zilibotti (2014), "Parenting with Style: Altruism and Paternalism in Intergenerational Preference Transmission", Econometrica, Econometric Society, Vol. 85, pp. 1331-1371, http://dx.doi.org/10.3386/w20214.

Dotti Sani, G. and J. Treas (2016), "Educational gradients in parents' child-care time across countries, 1965-2012", Journal of Marriage and Family, Vol. 78/4, pp. 1083-1096, http://dx.doi.org/10.1111/jomf.12305.

Durham, W. T. (2008). The rules-based process of revealing/concealing the family

planning decisions of voluntarily child-free couples: A communication privacy management perspective. Communication Studies, 59, 132-147.

Eley, T. C., McAdams, T. A., Rijsdijk, F. V., Lichtenstein, P., Narusyte, J., Reiss, D., Spotts, E. L., Ganiban, J. M., & Neiderhiser, J. M. (2015). The Intergenerational Transmission of Anxiety: A Children-of-Twins Study. *American Journal of Psychiatry*, *172*(7), 630–637. https://doi.org/10.1176/appi.ajp.2015.14070818

Emden, C., & Sandelowski, M. (1998). The good, the bad and the relative, part one: Conceptions of goodness in qualitative research. International Journal of Nursing Practice, 4, 206-212.

Fingerman, K. L., & Bermann, E. (2000). Applications of Family Systems Theory to the Study of Adulthood. *The International Journal of Aging and Human Development*, *51*(1), 5–29. https://doi.org/10.2190/7tf8-wb3f-tmwg-tt3k

Gauthier, A. H., Smeeding, T. M., & Furstenberg, F. F. (2004). Are Parents Investing Less Time in Children? Trends in Selected Industrialized Countries. *Population and Development Review*, *30*(4), 647–672. https://doi.org/10.1111/j.1728-4457.2004.00036.x

GenoPro. (n.d.). *Family Systems Theory*. GenoPro. https://genopro.com/genogram/family-systems-theory/.

Gibson, M. A., & Lawson, D. W. (2011). "Modernization" increases parental investment and sibling resource competition: evidence from a rural development initiative in Ethiopia. *Evolution and Human Behavior*, *32*(2), 97–105. https://doi.org/10.1016/j.evolhumbehav.2010.10.002

Gillespie, R. (2003). Childfree And Feminine. *Gender & Society*, *17*(1), 122–136. https://doi.org/10.1177/0891243202238982

Glaser, B. G., & Strauss, A. L. (1967). Discovery of grounded theory: Strategies for

Qualitative Research. Chicago: Aldine.

Gold, J. M. (2012). The Experiences of Childfree and Childless Couples in a Pronatalistic Society. *The Family Journal*, *21*(2), 223–229. https://doi.org/10.1177/1066480712468264

Heaton, T. B., Jacobson, C. K., & Holland, K. (1999). Persistence and change in decisions to remain childless. Journal of Marriage and Family, 61, 531-539.

Hee Lee, K. (2011). Journey to Remain Childless: A Grounded Theory of the Decision-Making Process among Voluntarily Childless Couples. Human Development and Family Studıes. Texas Tech University.

Heitlinger, A. (1991). Pronatalism and Women's Equality Policies. *Women's Equality, Demography and Public Policies*, 121–142. https://doi.org/10.1057/9780230374782_5

Hird, M. J., & Abshoff, K. (2000). Women without Children: A Contradiction in Terms? *Journal of Comparative Family Studies*, *31*(3), 347–366. https://doi.org/10.3138/jcfs.31.3.347

Hodapp, R. M. (1997). Direct and Indirect Behavioral Effects of Different Genetic Disorders of Mental Retardation. *American Journal on Mental Retardation*, *102*(1), 67. https://doi.org/10.1352/0895-8017(1997)102<0067:daibeo>2.0.co;2

Houseknecht, S. K. (1987). Voluntary childlessness. In M. B. Sussman & S. K. Steinmetz (Eds.), Handbook of marriage and the family (pp. 369–395). Plenum Press. https://doi.org/10.1007/978-1-4615-7151-3_14

Howitt, D. (2010). *Introduction to qualitative methods in psychology*. Prentice Hall.

Huang, S. X., & Rohlfing Pryor, J. (2018). Family Projection Process. *Encyclopedia of Couple and Family Therapy*, 1–4. https://doi.org/10.1007/978-3-319-15877-8_3-1

Jensen, T. M., Duke, N. N., Harris, K. M., Hotz, V. J., & Perreira, K. M. (2020). Like Parent, Like Child: Intergenerational Patterns of Cardiovascular Risk Factors at Midlife. *Journal of Adolescent Health*, *68*(3), 596–603. https://doi.org/10.1016/j.jadohealth.2020.06.039

Işık, E. (2008). Soy ağacı tekniğinin aile ve kariyer psikolojik danışmanlığında kullanılması. Dokuz Eylül Üniversitesi Buca Eğitim Fakültesi Dergisi, 23, 87-97.

Lackie, B. (1983). The families of origin of social workers. *Clinical Social Work Journal*, *11*(4), 309–322. https://doi.org/10.1007/bf00755898

Letherby, Gayle. 2002. "Childless and Bereft?: Stereotypes and Realities in Relation to 'Voluntary' and 'Involuntary' Childlessness and Womanhood." Sociological Inquiry 72:7–20.

Kağıtçıbaşı, C. (1982a). *The changing value of children in Turkey* (No. 60-E). Honolulu,

HI: East-West Center.

Kagitcibasi, C. (1990). Family and socialization in cross-cultural perspective: A model of change. In J. Berman (Ed.), Cross-cultural perspectives: Nebraska symposium on motivation, 1989 (pp. 135–200). Lincoln, NE: Nebraska University Press.

Kagitcibasi, C., & Ataca, B. (2005). Value of Children and Family Change: A Three-Decade Portrait From Turkey. Applied Psychology: An International Review, 54(3), 317–337. https://doi.org/10.1111/j.1464-0597.2005.00213.x

Kagitcibasi, C., & Ataca, B. (2015). Value of Children, Family Change, and Implications for the Care of the Elderly. *Cross-Cultural Research*, *49*(4), 374–392. https://doi.org/10.1177/1069397115598139

Karakuş, S., & Erkan, Z. (2019). Genogram Kullanımına Yönelik Çalışmaların İncelenmesi. *Mersin Üniversitesi Eğitim Fakültesi Dergisi*, 815–830. https://doi.org/10.17860/mersinefd.537764

Katz-Wise, S. L., Priess, H. A., & Hyde, J. S. (2010). Gender-role attitudes and behavior across the transition to parenthood. *Developmental Psychology*, *46*(1), 18–28. https://doi.org/10.1037/a0017820

Kerr, M., and Bowen, M., 1988. *Family Evaluation: An Approach Based on Bowen Theory*, NY, Norton.

Macklin, E. D., (1986). Nontraditional Family Forms. In M. B. Sussman & S. K. Steinmetz (Eds.), *Handbook of marriage and the family* (pp. 317-353). New York: Plenum

Maher, J. M., & Saugeres, L. (2007). To be or not to be a mother? *Journal of Sociology*, *43*(1), 5–21. https://doi.org/10.1177/1440783307073931

Matthews, E. J., & Desjardins, M. (2017). Remaking our identities: Couples' experiences of voluntary childlessness. The Family Journal, 25(1), 31–39. https://doi.org/10.1177/1066480716679643

Mayer, B. (2013). Family change theory: a preliminary evaluation on the basis of recent cross-cultural studies. *Intergenerational Relations*, 167–188. https://doi.org/10.1332/policypress/9781447300984.003.0011

Mawson, D. L. (2005). The meaning and experience of voluntary childlessness for married couples. *Dissertation Abstracts International*: Section B: The Sciences and Engineering, 66(12-B), 6951.

McGoldrick, M., Carter, E. A., & Garcia-Preto, N. (2014). *The expanded family life cycle: individual, family, social perspectives*. Pearson.

McGoldrick, M., Gerson, R., & Petry, S. (2008). Genograms: Assessment and intervention (3rd ed.). W W Norton & Co

Min, J., Silverstein, M., & Lendon, J. P. (2012). Intergenerational transmission of values over the family life course. *Advances in Life Course Research*, *17*(3), 112–120. https://doi.org/10.1016/j.alcr.2012.05.001

Mitchell, J. H., Broeren, S., Newall, C., & Hudson, J. L. (2013). An experimental manipulation of maternal perfectionistic anxious rearing behaviors with anxious and non-anxious children. *Journal of Experimental Child Psychology*, *116*(1), 1–18. https://doi.org/10.1016/j.jecp.2012.12.006

Mollen, D. (2006). Voluntarily Childfree Women: Experiences and Counseling Considerations. *Journal of Mental Health Counseling*, *28*(3), 269–282. https://doi.org/10.17744/mehc.28.3.39w5h93mreb0mk4f

Morrow, S. L. (2005). Quality and trustworthiness in qualitative research in counseling psychology. *Journal of Counseling Psychology*, *52*(2), 250–260. https://doi.org/10.1037/0022-0167.52.2.250

Morse, J. M., Barrett, M., Mayan, M., Olson, K., & Spiers, J. (2002). Verification strategies for establishing reliability and validity in qualitative research. *International Journal of Qualitative Methods*, *1*, Article 2. Retrieved April 2, 2009 from http://www.ualberta, ca/~ijqm

OECD (2019), Trends Shaping Education 2019, OECD Publishing, Paris, https://doi.org/10.1787/trends_edu-2019-en.

OECD (2016), Trends Shaping Education 2016, OECD Publishing, https://doi.org/10.1787/22187049.

Örs, O. P. ve Öngel, K. (2012). Aile hekimliği pratiği için genogramlama. Smyrana Tıp Dergisi, Ek Sayı 1, 49-50.

Park, K. (2005). Choosing Childlessness: Weber's Typology of Action and Motives of the Voluntarily Childless*. *Sociological Inquiry*, *75*(3), 372–402. https://doi.org/10.1111/j.1475-682x.2005.00127.x

Patterson, G. R. (1998). Continuities—A search for causal mechanisms: Comment on the special section. *Developmental Psychology*, *34*(6), 1263–1268. https://doi.org/10.1037/0012-1649.34.6.1263

Pelton, S. L., & Hertlein K. M. (2011) A Proposed Life Cycle for Voluntary Childfree Couples, Journal of Feminist Family Therapy, 23:1, 39-53, DOI: 10.1080/08952833.2011.548703

Peterson G. W., & Steinmetz S. K. (1999). Perspectives on Families as We Approach the Twenty-First Century-Challenges for Future Handbook Authors. In M. B. Sussman, S. K. Steinmetz, & G. W. Peterson (Eds.), *Handbook of marriage and the family* (pp. 1-10). New York: Plenum

Pimentel, D. (2016), "Protecting the free-range kid: Recalibrating parents' rights and the best interest of the child", Cardozo Law Review, Vol. 38, pp. 1-57, https://digitalcommons.law.uidaho.edu/faculty_scholarship/11.

Rhee, S. H., & Waldman, I. D. (2002). Genetic and environmental influences on antisocial behavior: A meta-analysis of twin and adoption studies. *Psychological Bulletin*, *128*(3), 490–529. https://doi.org/10.1037/0033-2909.128.3.490

Rodrigo, M. J., Byrne, S., & Rodríguez, B. (2014). Parenting Styles and Child Well-Being. *Handbook of Child Well-Being*, 2173–2196. https://doi.org/10.1007/978-90-481-9063-8_86

Radey, M. and K. Randolph (2009), "Parenting sources: How do parents differ in their efforts to learn about parenting?", Family Relations, Vol. 58/5, pp. 536-548, http://dx.doi.org/10.1111/j.1741-3729.2009.00573.x.

Sandelowski, M. (1995). Focus on qualitative methods: Sample size in qualitative research. Research in Nursing & Health, 18, 179-183.

Schier, K. (2010). „Gdy dziecko staje sie rodzicem" –odwrócona troska, czyli zjawisko parentyfikacjiw rodzinie ['When the child becomes the parent'– reversed care, the phenomenon of parentification in the family]. In B. Tryjarska

(Ed.), Bliskoscw rodzinie. Wiezi w dziecinstwie a zaburzeniaw doroslosci [Closeness in the family. Ties in childhood and adulthood disorders] (pp. 63–80). Warsaw: Wydawnictwo Naukowe Scholar.

Schier, K. (2014). Dorosle dzieci. Psychologiczna problematyka odwrócenia ról w rodzinie [The adult children. Psychological problem of reversing roles in the family]. Warsaw: Wydawnictwo Naukowe Scholar.

Serbin, L., & Karp, J. (2003). Intergenerational Studies of Parenting and the Transfer of Risk From Parent to Child. *Current Directions in Psychological Science*, *12*(4), 138–142. https://doi.org/10.1111/1467-8721.01249

Settle, B., & Brumley, K. (2014). "It's the Choices You Make That Get You There": Decision-Making Pathways of Childfree Women. *Michigan Family Review*, *18*(1), 1. https://doi.org/10.3998/mfr.4919087.0018.102

Shaw, R. (2012). Being Childfree in New Zealand: How couples who choose to not have children are perceived [Review of the book Being Childfree in New Zealand, by T. Riley]. Women's Studies Journal, Women's Studies Association of New Zealand.

Shaw, R. L. (2010). Women's experiential journey toward voluntary childlessness: An interpretative phenomenological analysis. *Journal of Community & Applied Social Psychology*, *21*(2), 151–163. https://doi.org/10.1002/casp.1072

Stabler, R. (2013). *Investigating family context: an exploratory study to research how therapists use genograms as a therapeutic tool with individuals in one-to-one therapy* (dissertation).

Starr, L. R., Conway, C. C., Hammen, C. L., & Brennan, P. A. (2013). Transdiagnostic and disorder-specific models of intergenerational transmission of internalizing pathology. *Psychological Medicine*, *44*(1), 161–172. https://doi.org/10.1017/s003329171300055x

Şahin, Y. (2017). Using spiritual genograms in family therapies. Spiritual Psychology and Counseling, 3, 47-60.

Ulfers, H. (2020). Why parenting matters for children in the 21st century. *OECD Education Working Papers*. https://doi.org/10.1787/129a1a59-en

Valentine, G. (1999). Doing household research: Interviewing couples together and apart.

Area, 31, 67-74.

Varol, R. (2015). Genogram temelli yürütülen psikolojik danışma sürecinin çiftlerde evlilik uyumu, duygusal bağlılık, evlilikte problem çözme ve benliğin ayrımlaşma düzeylerine etkisi, (Yayımlanmamış yüksek lisans tezi). Mevlana Üniversitesi Sosyal Bilimler Enstitüsü, Konya.

Veevers, J. E. (1980). *Childless by choice*. Toronto: Butterworth.

Vente, W., Majdandžić, M., & Bögels, S. M. (2020). Intergenerational transmission of anxiety: linking parental anxiety to infant autonomic hyperarousal and fearful temperament. *Journal of Child Psychology and Psychiatry*, *61*(11), 1203–1212. https://doi.org/10.1111/jcpp.13208

Yaman, H. ve Akdeniz, M. (2011). Sistemik aile hekimliği. Türk Aile Hek. Derg, 15(2), 77-80.

Yavuz, S., & Güllüpınar, F. (2019). Türkiye'de Çocuğun Ekonomik Değerini Etkileyen Faktörler: 2016 Aile Yapısı Araştırması Analizi Üzerinden Sosyolojik Bir Değerlendirme. *İstanbul Üniversitesi Sosyoloji Dergisi*, *39*(2). https://doi.org/10.26650/sj.2019.39.2.0101

Zahran, S. (2011), "Type of parental socialization across cultures a psychoanalysis review", Psychology, Vol. 2/5, pp. 526-534, http://dx.doi.org/10.4236/psych.2011.25082.

APPENDICES

APPENDIX A: DEMOGRAPHIC INFORMATION QUESTIONS

DEMOGRAFİK BİLGİ SORULARI

1) Yaşınız?

2) Cinsiyetiniz?

3) Eğitim durumunuz?

4) Mesleğiniz?

5) Aylık gelir düzeyiniz?

6) Kaç yıldır evlisiniz?

7) Ne kadar süredir birliktesiniz?

8) Tedavi gerektiren bir ruhsal rahatsızlık geçirdiğiniz mi?

□Evet

□Hayır

9) Evet ise bu rahatsızlık nedeniyle nasıl bir tedavi gördünüz?

□Psikolojik Tedavi

□İlaç Tedavisi

10) Tedavi gerektiren bir fiziksel rahatsızlık geçirdiniz mi?

11) Geçirdiyseniz rahatsızlığın ne olduğunu belirtiniz

12) Mensup olduğunuz bir din var mı?

□Evet

□Hayır

Evet ise belirtiniz…….

13) Kendinizi ne kadar dindar biri olarak nitelendirirsiniz?

1. Hiç dindar değilim
2. Pek dindar değilim
3. Orta derecede dindarım
4. Dindarım
5. Çok dindarım
6. Diğer (Belirtiniz .....)

APPENDIX B: SEMI-STRUCTURED INTERVIEW QUESTIONS

YARI-YAPILANDIRILMIŞ GÖRÜŞME SORULARI

AİLEYİ TANIMAYA YÖNELİK

1) Sizleri daha iyi anlayabilmem için bana ailenizden kısaca bahseder misiniz?

2) Ailenizde kritik yaşam olayları oldu mu? (travmatik olaylar, ölümler gibi) Biraz bahseder misiniz?

3) Kuşaklar boyunca ailenizde fiziksel ya da psikolojik rahatsızlık durumu olan bir birey var mıydı? Ya da var mı?

4) Ailenizde gebelik sırasında ve/veya doğum sonrası küçük yaşta kayıplar var mı?

5) Bu aileyi tek bir sözcük ile tanımlasanız bu sözcük ne olurdu?

AİLEYE VE ÇOCUĞA YÜKLENEN ANLAM

6) Sizce aile olmak ne demektir? Kendi aile tanımınızı yapsanız, nasıl yapardınız?

7) Sizce bu tanım kendi geniş ailenizin tanımıyla nasıl örtüşüyor/ayrışıyor?

8) Ailenizde çocuğa yüklenen anlam/değer nedir?

9) Peki sizin için çocuğun anlamı nedir?

10) Kuşaklar boyunca baktığınızda ailenizdeki öncelikler nelerdir?

11) Sizce ailenizin temel değerleri nelerdir?

ÇOCUKLUK, ERGENLİK YILLARI VE KUŞAKLARARASI AİLE İLİŞKİLERİ

18) Nasıl dünyaya gelmişsiniz? Ebeveynlerinizin sizi dünyaya getirmeyle ilgili kararı nasıl olmuş? Bildiğiniz kadarıyla anlatır mısınız?

12) Nasıl bir çocukluk geçirdiniz?

13) Çocukluğunuzu yansıtacak bir anınızı anlatır mısınız?

14)Nasıl bir ergenlik geçirdiniz?

15) Ergenliğinizi yansıtacak bir anınızı anlatır mısınız?

16) Hatırladığınız ilk zaman diliminden başlayarak ebeveynlerinizle ilişkilerinizden bahseder misiniz?

17) Anne-babalarınızın kendi ebeveynleriyle olan ilişkilerinden bahseder misiniz?

EBEVEYN OLMAK /OLMAMAK

19) Sizce gözlemlediğiniz kadarıyla ebeveyn olmak anne ve babanız için nasıl bir şeydir?

20) Ailenizde çocuk sahibi olmakla ilgili konuşulan ya da konuşulmayan ne tür değerler, görüşler, kurallar vardır?

21) Ailenizde çocuk sahibi olmayan başka kişiler var mı? Bu süreç onlar için nasıl gelişmiş?

22) Ailenizde çocuk sahibi olan diğer kişiler var mı? Onlarla ilgili gözlemlerinizden biraz bahseder misiniz?

KARAR VERME SÜRECİ/ MOTİVASYONLARI VE SONUÇLARI

23) Çocuk sahibi olmama kararını nasıl aldınız?

24) Kararınızı tekrar gözden geçirdiğiniz veya kararınızdan şüphe duyduğunuz zamanlar oldu mu?

25) Doğru kararı verdiğinize ikna olduğunuz zamanlar oldu mu?

26)Bu kararı almanızda rol oynayan etkenlerden söz eder misiniz?

27)Sizce bu kararda ailesel etkenler rol oynamış olabilir mi? Nasıl?

28) Çocuk sahibi olmama kararınızı ailenizde kimlerle paylaştınız? Tepkileri ne oldu?

Eğer paylaşmadılarsa

29) Paylaşsaydınız tepkileri ne olurdu?

30) Bu kararın sonuçları neler oldu?

31) Bu kararın sizin açınızdan olumlu ve olumsuz yönleri neler oldu?

32) Çocuk sahibi olmama kararınızdan memnuniyet duyduğunuz anlara örnek verir misiniz?

33) Çocuk sahibi olmakla ilgili baskı hissettiğiniz zamanlar oldu mu? Bu konuda ne yaptınız?

34) Nelerle baş etmek durumunda kaldınız?

ANNELİK/BABALIK, KADINLIK/ERKEKLİK ROLLERİ

35) Ailenizde "annelik" rolü ile ilgili beklentiler ve deneyimler nelerdir?

36) Ailenizde "babalık" rolü ile ilgili beklentiler ve deneyimler nelerdir?

37) Kendi anne-babanızın ebeveynlik becerilerini nasıl değerlendirirsiniz?

38) Sizce onlar ebeveyn olmayı nasıl öğrenmişlerdir?

39) Peki, siz onlardan ebeveynlikle ilgili neler öğrendiniz?

40) Anne-babalık ve çocuk sahibi olmayla ilgili toplumsal ve kültürel değerler kuşaklar boyunca ailenizi nasıl etkilemiş olabilir?

41) Ailenizde "Kadınlık" rolleri nasıl tanımlanmıştır?

42) Ailenizde "erkeklik" rolleri nasıl tanımlanmıştır?

43) Genellikle insanlar belli bir yaştan sonra kendi kimliklerini anne-babalık kimlikleri üzerinden tanımlamaya başlarlar ya da merkeze onu koyabilirler. Çocuk sahibi olmama kararını sizin kendi kimliğinizle ilgili algınızda bir değişiklik yarattı mı? Yarattıysa nasıl yarattı?

KUŞAKLARASI AKTARIM /AİLE YAŞAM DÖNGÜSÜ

44) Çift olarak bundan sonraki kuşaklara aktarmak istediğiniz şeyler nelerdir? Nasıl?

45) Ailenizde kuşaklar boyunca aktarıla gelmiş ancak sizden sonraki kuşaklara aktarılmasını istemediğiniz neler var? Nasıl?

46) Genel olarak aileler –özellikle bizim gibi toplumlarda- ileriki aile evrelerini çocuk üzerinden planlarlar ve kurgularlar. Sizin çocuk sahibi olmamayı seçen bir çift olarak ailenizin sonraki evreleri için ne tür planlar/ kurgular var zihninizde?

47) Orta yaşa geldiğinizde çift olarak aileniz ne yapıyor olacak?

48)İleri yaş döneminde çift olarak ailenizi nerede görüyorsunuz?

49) Ailenizde sonraki kuşaklar tarafından nasıl hatırlanmak istersiniz? Özellikle arkanızda bırakmak istediğiniz bir değer var mı?

50) Çocuk sahibi olmama kararını yeni almış bir çifte karşılaşsanız bu çifte vereceğiniz öneriler neler oldurdu?

APPENDIX C: STANDARD GENOGRAM SYMBOLS

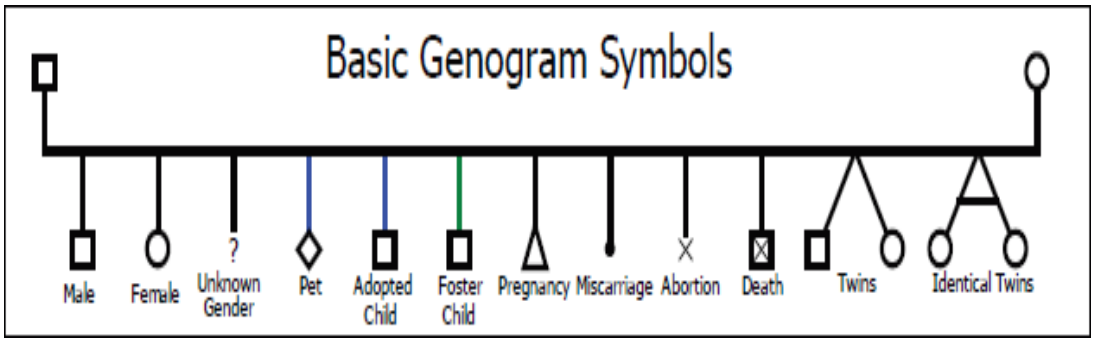

Figure 1. Basic genogram symbols. Adapted from "Genopro". Retrieved June 27, 2021, from https://genopro.com/genogram/symbols.

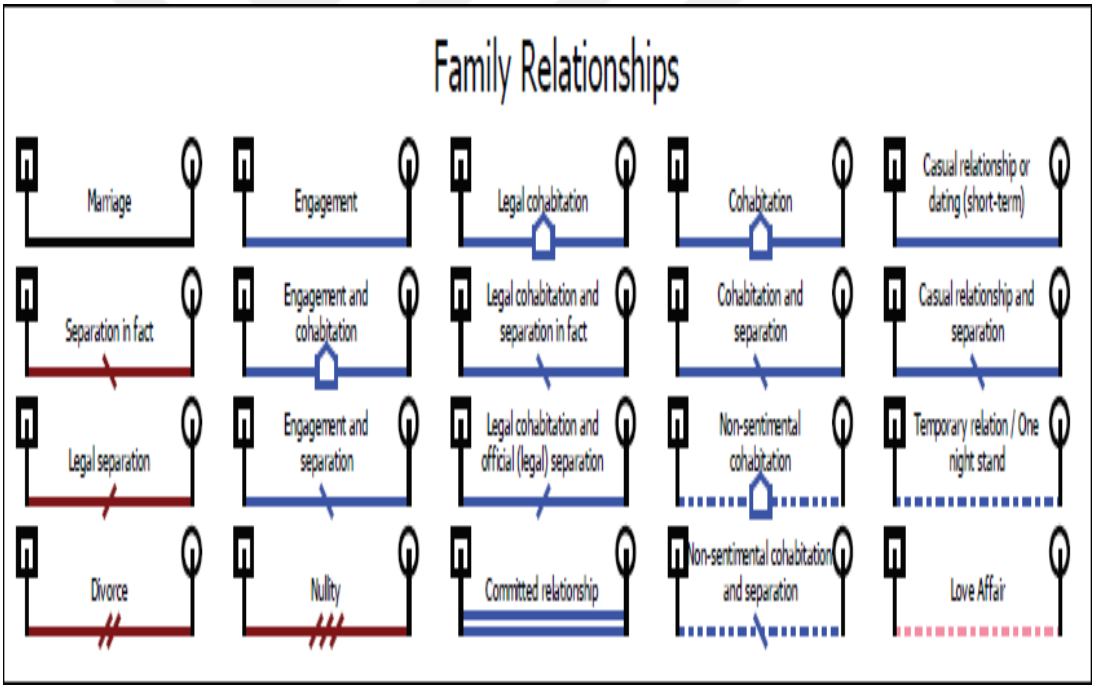

Figure2. Family relationships. Adapted from "Genopro". Retrieved June 27, 2021, from https://genopro.com/genogram/symbols.

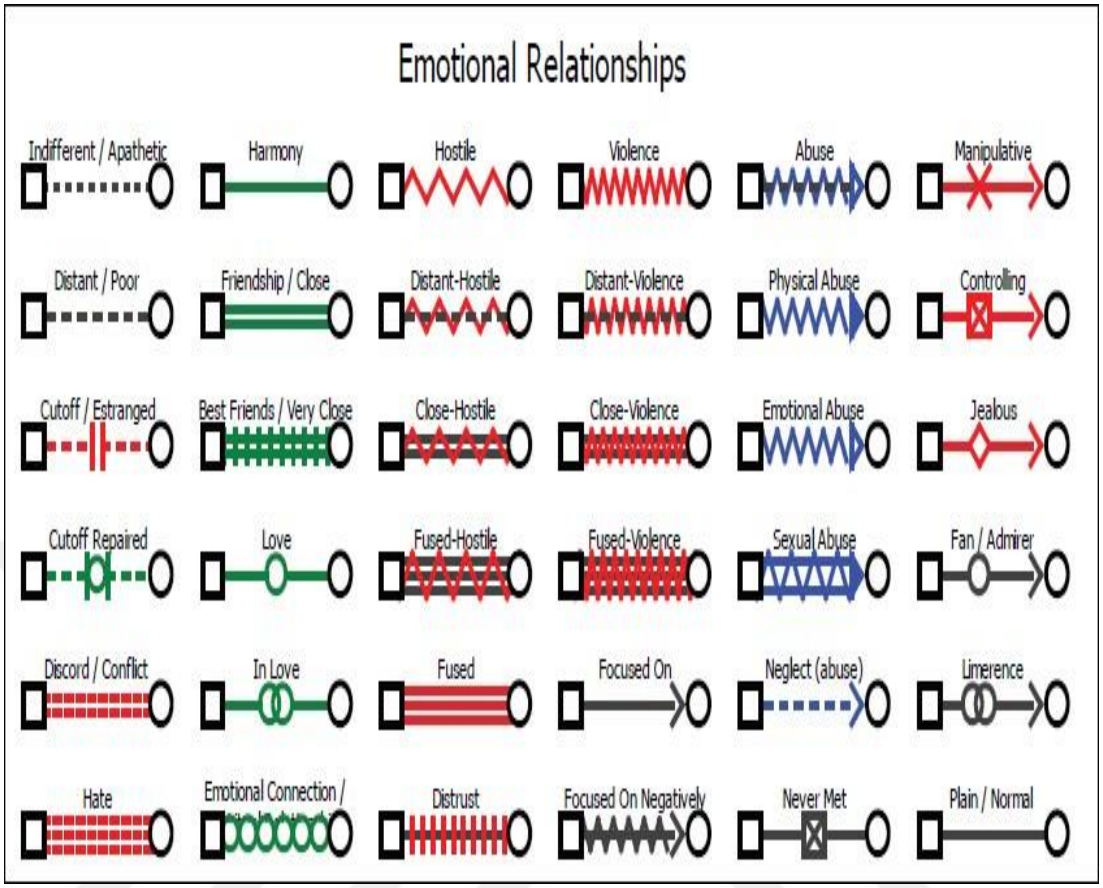

Figure 3. Emotional relationships. Adapted from "Genopro". Retrieved June 27, 2021, from https://genopro.com/genogram/symbols.

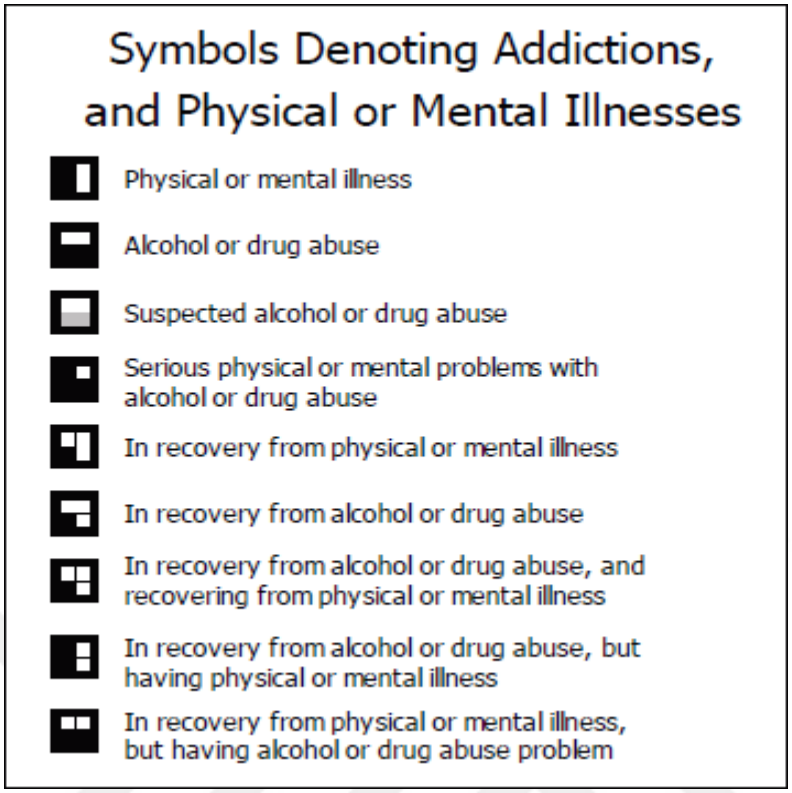

Figure 4. Symbols denoting addictions, and physical or mental illnesses. Adapted from "Genopro". Retrieved June 27, 2021, from https://genopro.com/genogram/symbols.

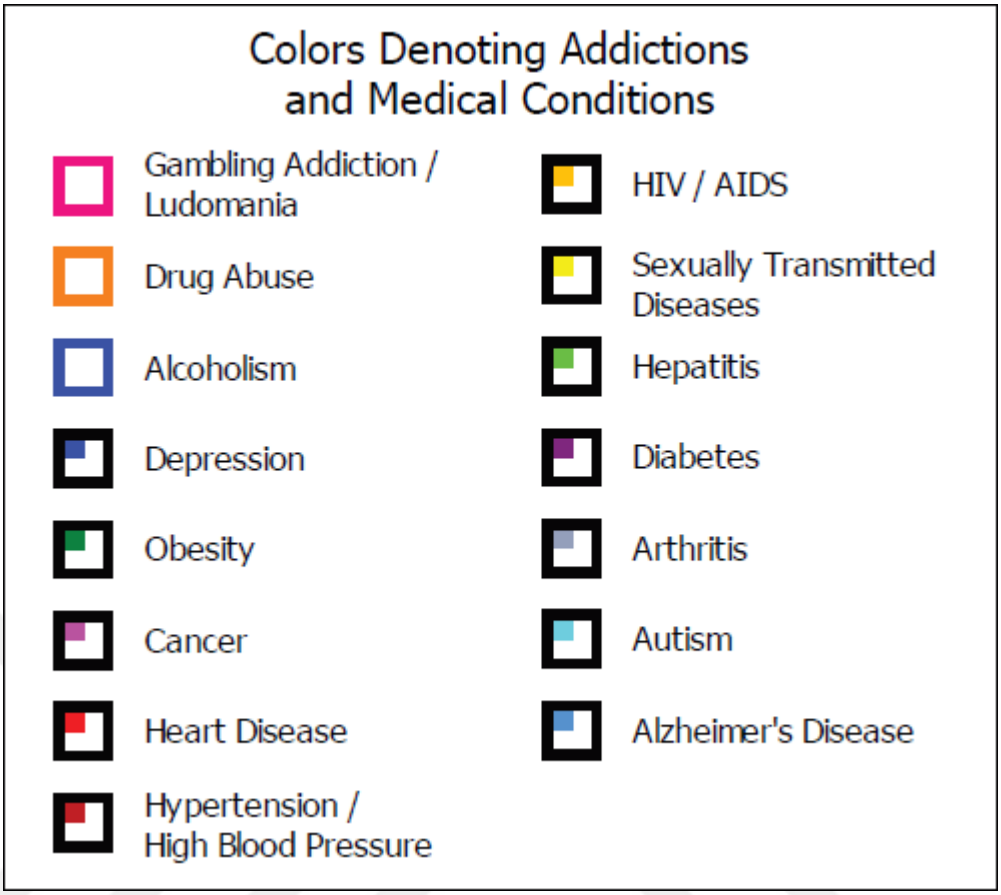

Figure 5. Colors denoting addictions and medical conditions. Adapted from "Genopro". Retrieved June 27, 2021, from https://genopro.com/genogram/symbols.

APPENDIX D: GENOGRAMS OF MARRIED COUPLES

Family 1

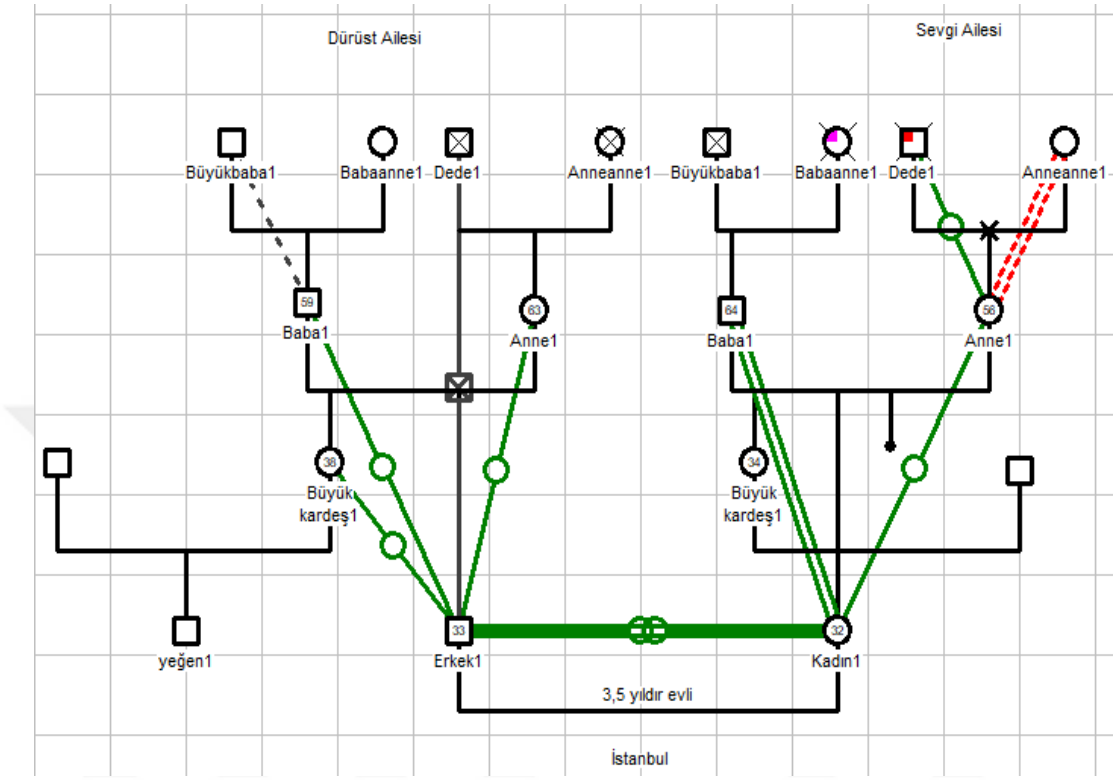

The participants are a woman -Ayşe- from love and a man -Halit- from an honest family. They are married for three and half years, graduated from a university, and lives in Istanbul. While a man working in the private sector, the woman is a freelancer. The emotional relationship between third and second generations shows that both have a good relationship with their parents, especially women and her father are like close friends who do regular activities together. The grandfather of women from two sides and grandmother have died from respectively unknown reason, heart failure, and cancer. The emotional relationship between the mother and the grandfather of women is good while she has a conflictual relationship with her mother because of not allowed her to work, at the same time, the relationship of father and grandfather of man is distant because of the idea that showing love towards children is considered shameful. There is also an instrumental parentification experience for the father of man since his sister was not allowed to go to school, he took care of her and provided education for her in the city where he was also studying.

Family 2

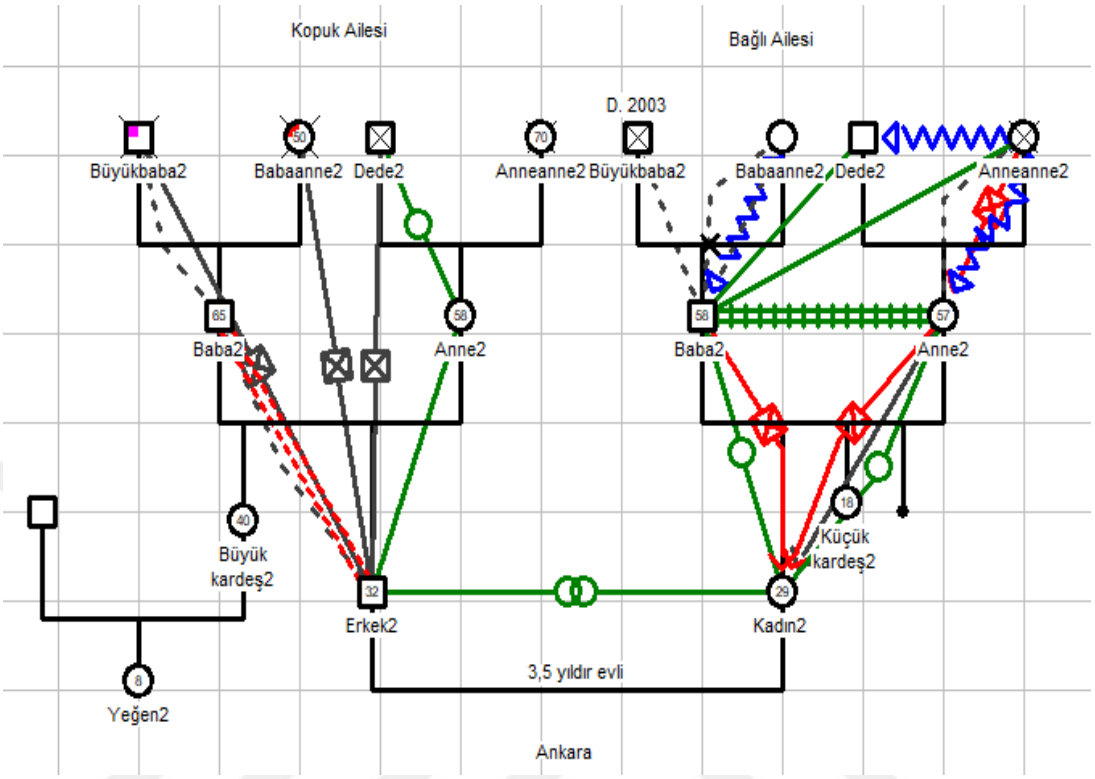

The participants are a man -Ahmet- from disconnected, woman -Öykü- from a connected family. They are married for three and half years, graduated from a university, and live in Ankara. While a man working in the private sector, the woman is a doctor. There might be the intergenerational transmission of anxiety and helicopter parenting for women. The grandmother of the woman is described as a very anxious woman who was always worried about the safety of her children likewise the mother of the woman. The woman and her father were used antidepressants mother and her mother are still using. The grandmother was also doing emotional abuse towards both her husband and the daughter by insulting, hurtful talking, and not showing affection. Moreover, there might be the intergenerational transmission of triangles, since there is a repetitive distant and conflictual emotional relationship between man and his father, and the distant relationship between his grandfather with his father was reported. Moreover, the emotional relationship between the father of women and his parents, he was physically abused by working hard in the family business as child labor, there is an instrumental parentification.

Family 3

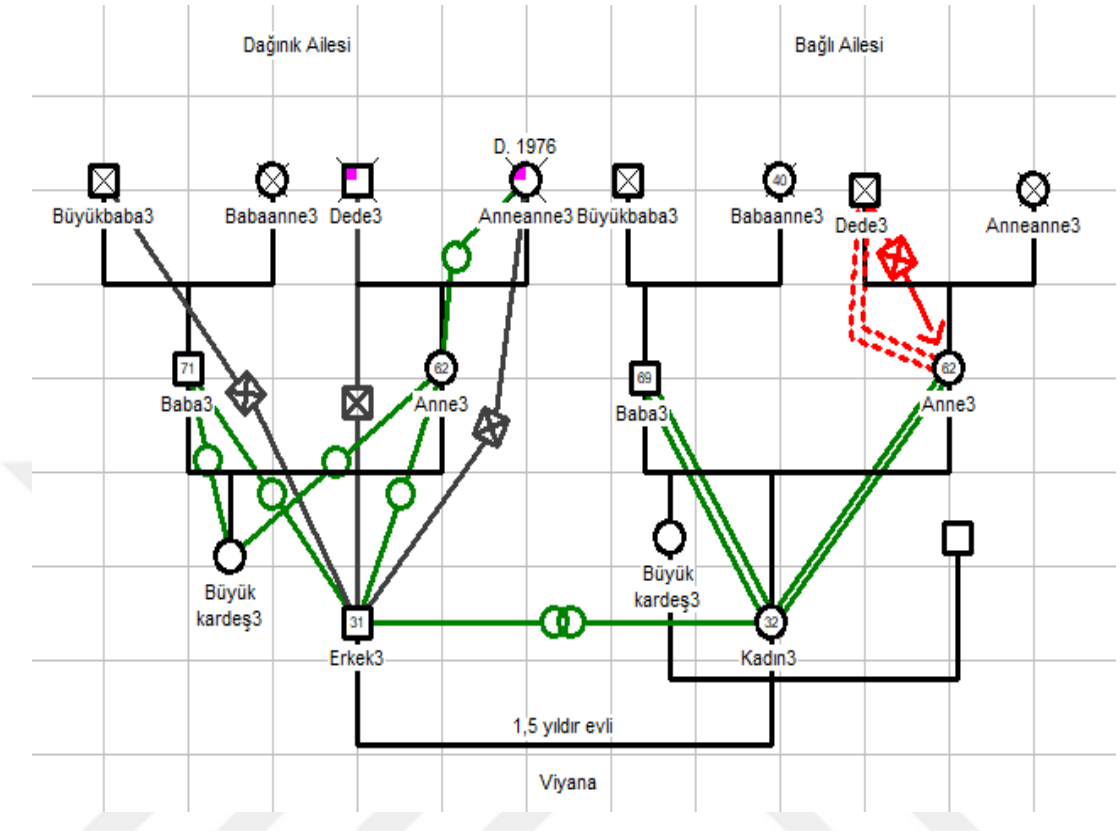

The participants are a woman -Serpil- from connected, a man -Sinan- from a scattered family. They are married for one and half years, graduated from a university, and lives in Vienna for a couple of years. While the man working as a research assistant in a doctorate program, the woman is not working currently. The emotional relationship between participants and their parents is reported good. The emotional relationship between the second and first-generation is not well informed since their parents were not telling stories about the relationship with their own parents. However, the grandmother of the man has died when his mother was the age of 17, especially by their father, she and the other sisters were treated as if they are the ones who should serve the family while boys were supposed to go to school and work. So, there might be especially instrumental parentification as a result of grandmother's death. However, intergenerational discontinuity of emotional relationships between the generations should be noticed. The woman and her parents have a relationship like a friend.

Family 4

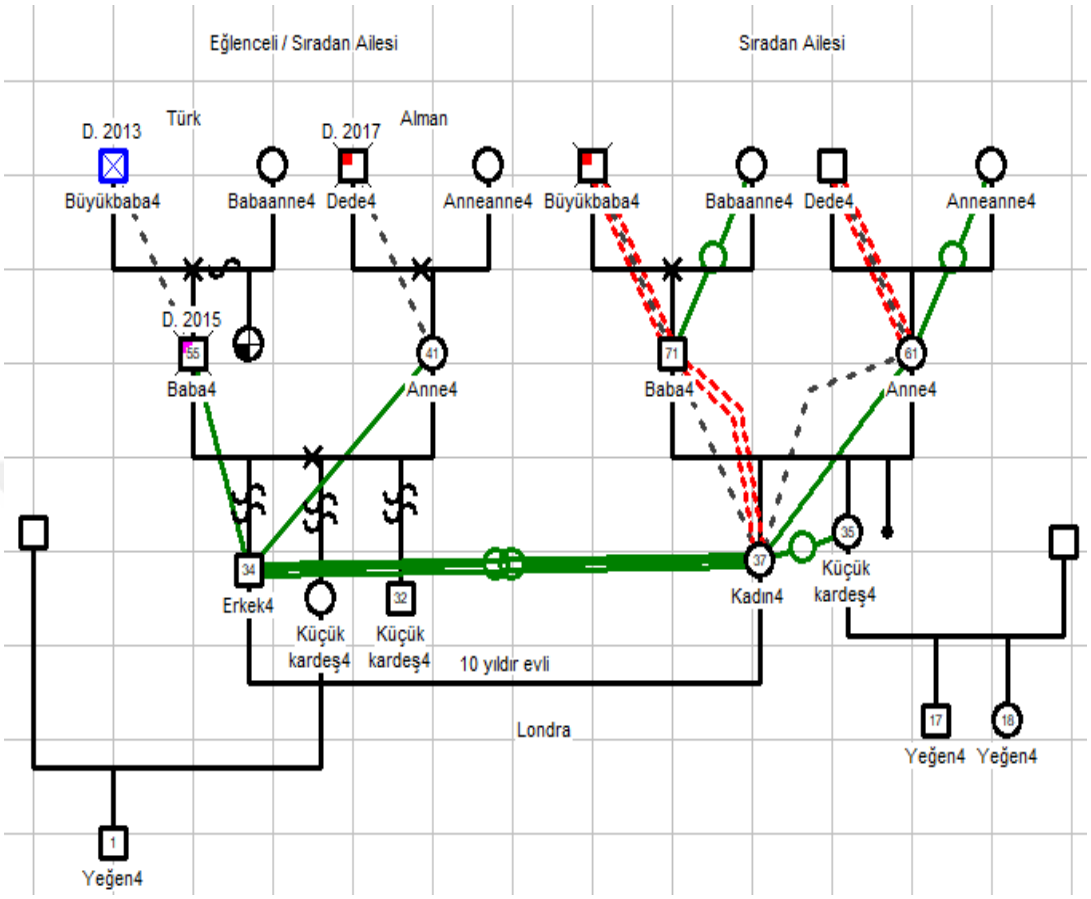

The participants are a man -Miraç- from fun/ordinary and a woman -Kardelen- from an ordinary family. They are married for ten years, graduated from a university, and lives in London for a couple of years. While the woman is working as a waitress, the man is working as a hotel manager. In the emotional relationship between participants and their parents, the woman has harmony with her mother and a conflictual/distant relationship with her father. As an intergenerational transmission of triangles, like woman's mother's relationship with her parents, the relationship with woman's father and grandfather is also conflictual and distant while a good relationship with his mother but not very close like a friend as she says, poor in terms of sharing emotions and life experiences. When we look at the emotional relationship of man side, he has a good harmony both of his parents. Because of the economic hardship, World War II, there is a kind of poor relationship between his parents with their own parents.

Family 5

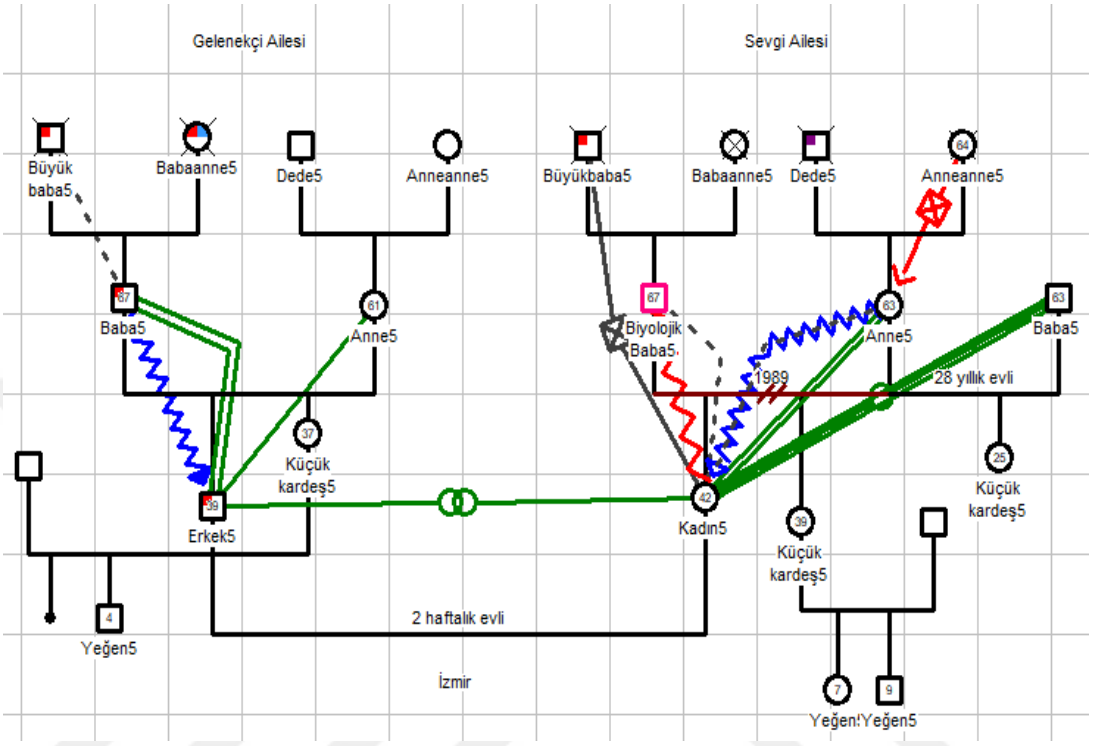

The participants are a man -Murat- from traditionalist and a woman -Melis- from love. They are married for two weeks, graduated from a university, and live in Izmir. While the woman is working in the family firm, the man is working in the private sector. As you can see, there is an intergenerational transmission of heart disease from the father's side for man. The emotional relationship between man and his parents shows that he has a good relationship with his parents, however, during his adolescent years, he was subjected to physical violence by his father couple of times, he reported that they are having a relationship like a friend currently. The woman's mother and biological father were divorced in 1989 mainly because of gambling addiction. The emotional relationship of a woman with biological father is distant/ hostile and while she reported emotional parentification during the process of divorce, she had to befriend her mother and be mature, so she did not spend her childhood/adolescence as it should be and it can be a kind of abuse, however, she has a very good relationship with her stepfather. The grandmother of the woman is described as despotic, so the relationship bases on control.

Family 6

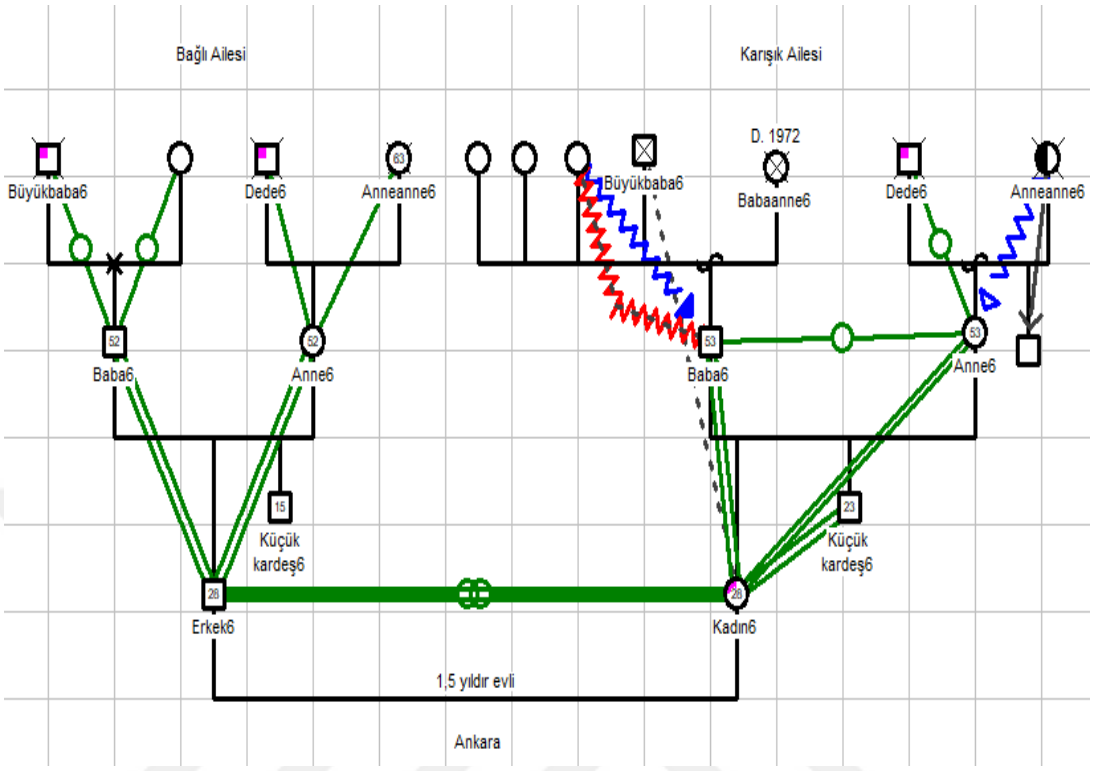

The participants are a man -Uğur- from connected and a woman -Begüm- from a complicated family. They are married for one and half years, graduated from a university, and live in Ankara While the woman is working as a teacher giving online classes, the man is working in the private sector. The woman's grandmother was a history of being overly anxious and then turning to schizophrenia. When we look at the emotional relationship between a man and his parents, they have a close relationship. The relationship between first and second generations is also based on love so the good relationship with parents might be transmitted from generations. On the woman's side, her grandmother passed away when her father was 4 years old. The emotional relationship between the woman's father and his stepmother was distant and hostile, and he was physically abused by her during childhood. The woman's grandmother favored her son over daughters treated them as girls who should take care of the house chores. So, there might be the transmission of instrumental parentification. During the times her mother was taking care of her mother for seventeen years, the woman also expressed instrumental parentification towards her brother.

Family 7

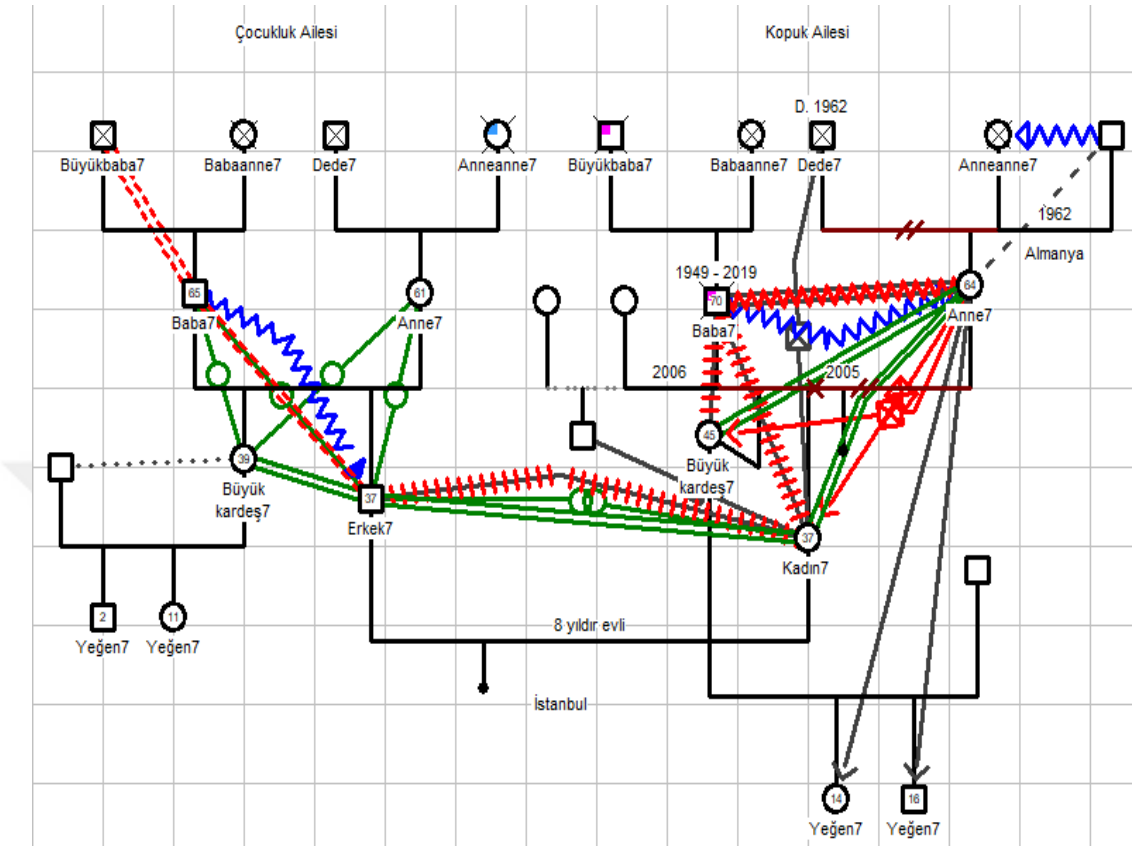

The participants are a man -Erdi- from childhood and a woman -Dilara- from a disconnected family. They are married 8 years, graduated from a university, both working in the private sector, and lives in Istanbul. Although the woman experienced chemical pregnancy at the beginning of the marriage, they have not wanted a child after that time. In the first generation, there was emotional abuse toward grandmother. Likewise in the second generation, there was always close violence and emotional abuse at the time the woman's parents were together. They were divorced as a result of cheating issues of father, that influence woman to have difficulty trusting a lot of things in life including trusting her spouse and father. Her mother was extremely controlling and protective towards their children until the big sister got married. After that, mother and woman developed a close relationship. On the other side, the emotional relationship between a man with his family is based on love, although there are certain times that his father physically abuses him and because of political disagreement, they sometimes conflict. His father was child labor since primary school and sometimes conflict with the grandfather of man.

Family 8

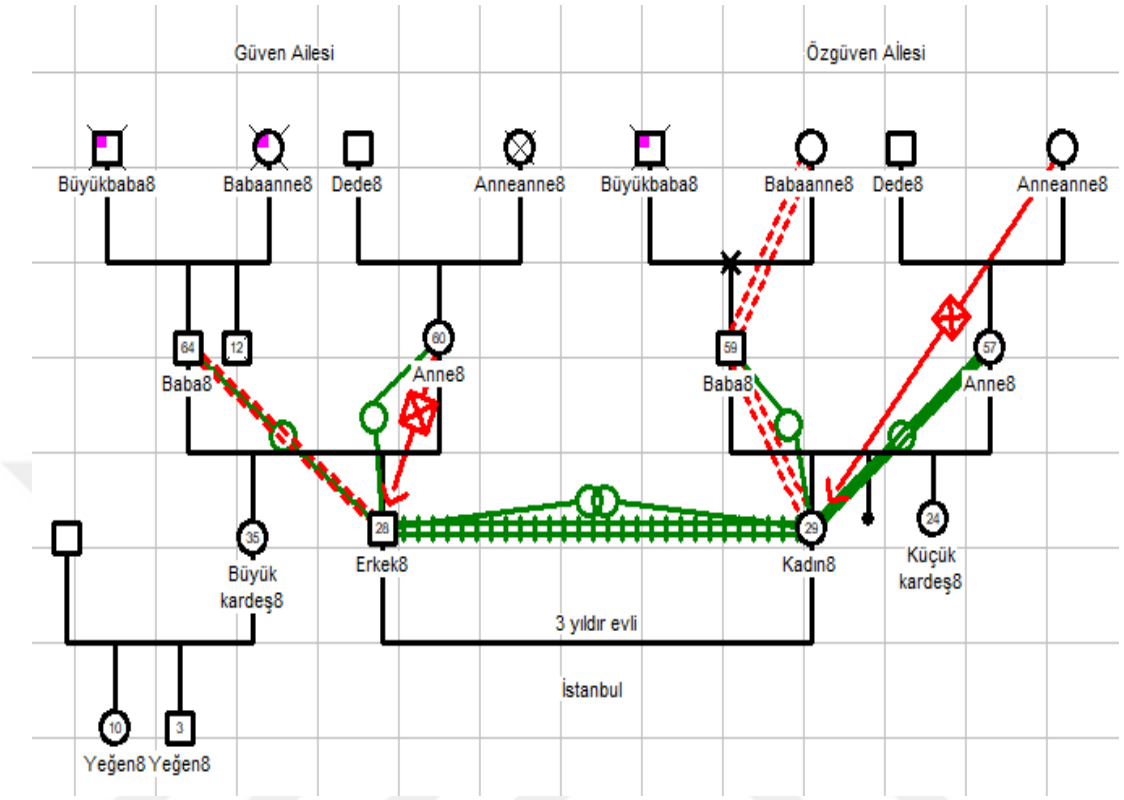

The participants are a man -Barış- from trust and a woman -Nilüfer- from a self-confident family. They are married three years, graduated from a university, and lives in Istanbul. While the woman works in the private sector, the man is a doctor. They are in love and have a strong friendship. The emotional relationship between the woman and her parents is based on love, especially she has a close relationship with her mother while because of patriarchal attitudes of her father, they sometimes conflict with each other. In the first generation, since the woman's grandmother is a religious preacher and the father of the woman is atheist, they also sometimes conflict. Moreover, the mother of a woman's mother was a bit oppressive attitude toward the woman when they were kids in terms of the religious context. On the other side of man, the emotional relationship between man and his parents is based on love, however, since the mother is defined as extremely protective and controlling, it restricted man's socialization at the times during childhood and they were in constant conflict throughout adolescence. After that, their relationship got better.

Family 9

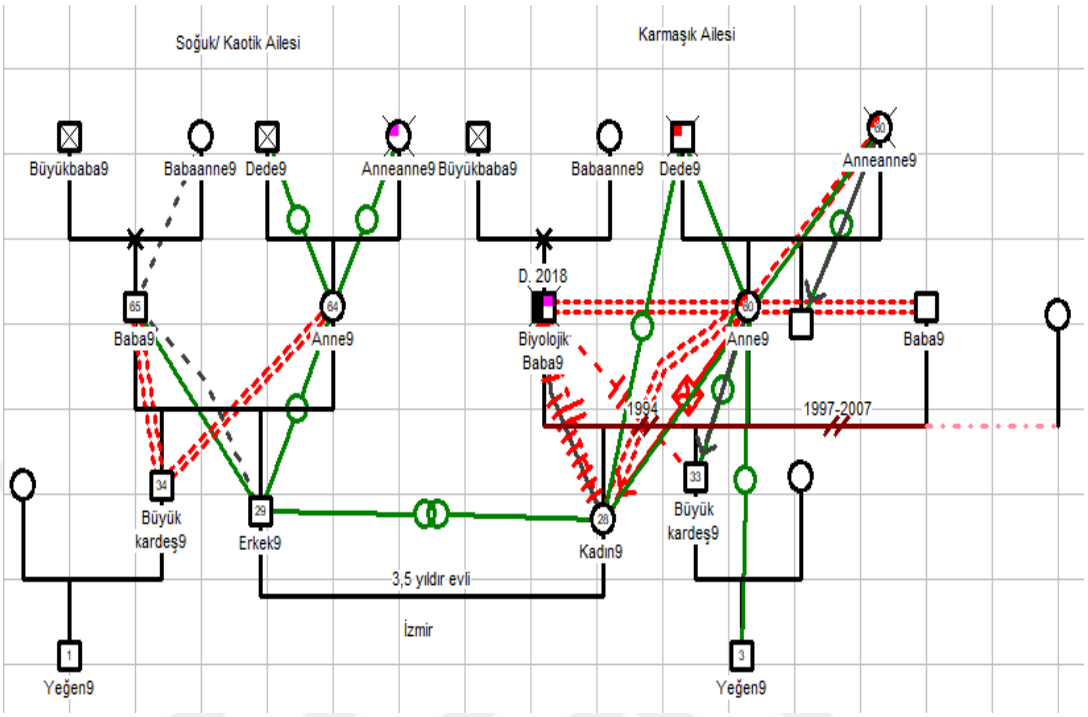

The participants are a man -Oğuz- from cold/chaotic and a woman -Deniz- from a complicated family. They are married for three and half years, graduated from a university, and live in Izmir. While the woman does not work currently, the man works as an engineer. The biological father of the woman had a mental disease of bipolar disorder, got cancer, and died two years ago. They separated due to difficulties brought by mental illness. The mother got married again and then divorced as a result of marital conflicts and infidelity. Likewise, the grandmother of the woman favored her son over her daughters and had a conflictual relationship with them, the mother of the woman also favored her son over the woman and there is a constant conflict. On the other side of man, he has a good relationship with his parents, his parents favored him over his brother, they are conflicting with his brother. From the beginning of childhood to early adulthood, the relationship between woman and mother was not good like today, they were not got along because of the controlling, oppressive, and patriarchal beliefs of the mother. Also, there is a cutoff relationship with their father, the woman hasn't trusted her father because of liars, and they haven't seen each other.

Family 10

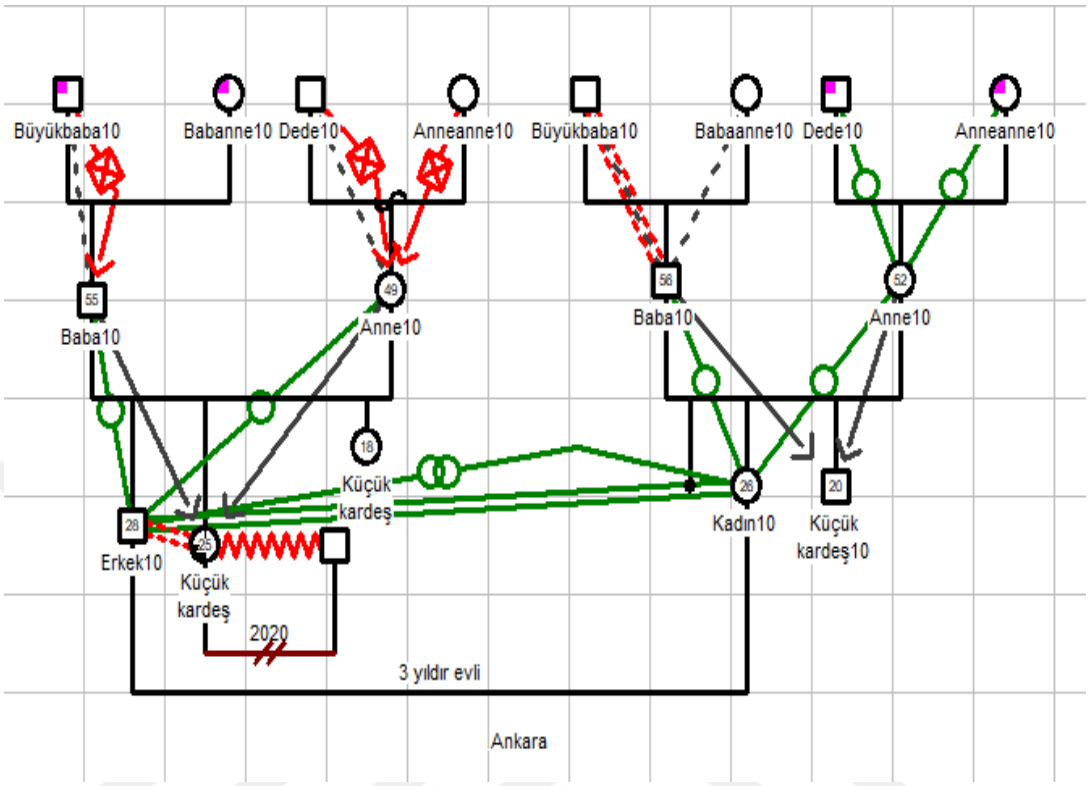

The woman -Burcu- and man -İsmail- participants are married for three years, lives in Ankara and both are a lawyer. The woman describes the relationship with her parents as a loving family similar to the emotional relationship of the woman's mother with her own family. they love to spend time together, show their affection especially focus on her brother since he is a younger and national athlete. On the other side of man, but he has a conflictual relationship with his sister, there has been always a problem related with her when she is preparing for the exam, the years of college, or during the divorce process. His parents focus on her life by getting involved in everything it is a kind of fusion. The parents also expect him to be the parent for her or using him to be like a bridge to reach her. There might be emotional parentification. Moreover, the relationship between first and second-generation for the man, both grandfathers and grandmother are controlling, authoritarian parents, do not show their love to their children as a distant relationship. As an intergenerational discontinuity, the emotional relationship of the man with their parents is based on love and feel each other affection.

Family 11

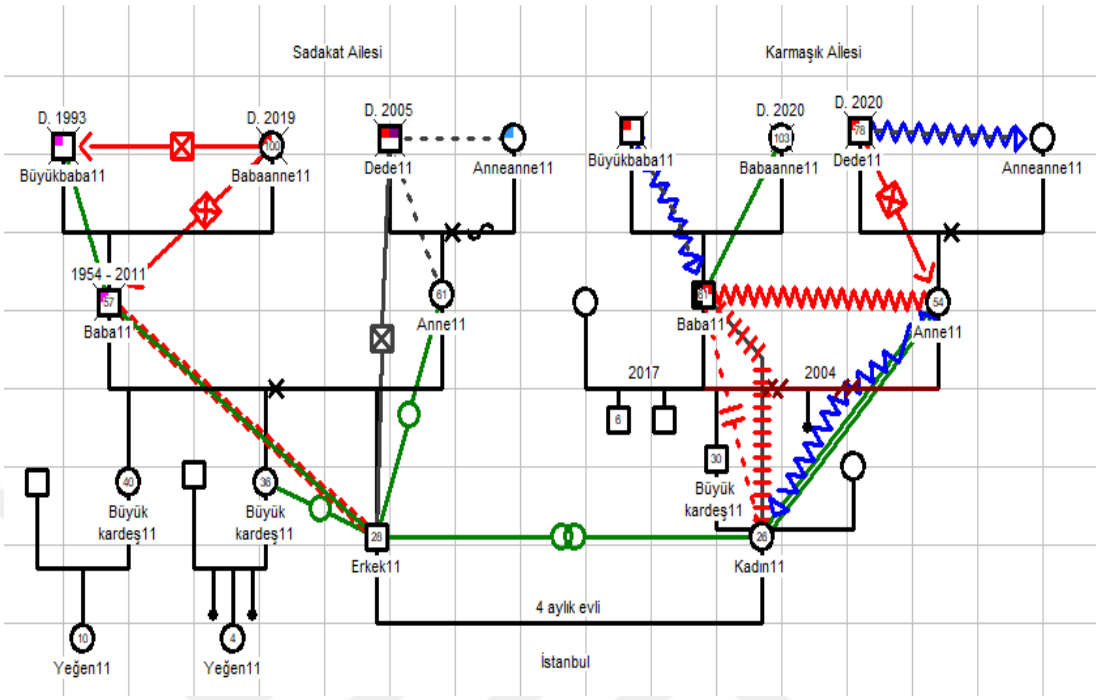

The participants are a man -Mert- from loyalty and a woman -Zeynep- from a complicated family. They are married for 4 months, graduated from a university, and lives in Istanbul. While a woman works as a researcher in the doctoral program, the man works in the private sector. The father of the woman was diagnosed with paranoid schizophrenia, the parents got divorced in 2004 because of marital discord, violence, and the difficulties of mental issues. Their relationship with her father was cut off, they don't see each other, she does not trust him because of his irresponsibility. Also, during her childhood years, she was subjected to emotional abuse by her mother in the form of anger issues, she also taking psychotherapy about the same issue. But through time, the emotional relationship with her mother gets better. On the other side of man, his father died due to cancer their relationship is getting better through the time, except adolescence years, there were conflicts like a battle for authority. When we look at the first and second generation, the grandmother of a man is also a very authoritarian woman against his husband and her children. On the other side, the woman's mother was not allowed to go to school, subject to oppression by her father like her mother, the woman's father also experienced emotional abuse.

Family 12

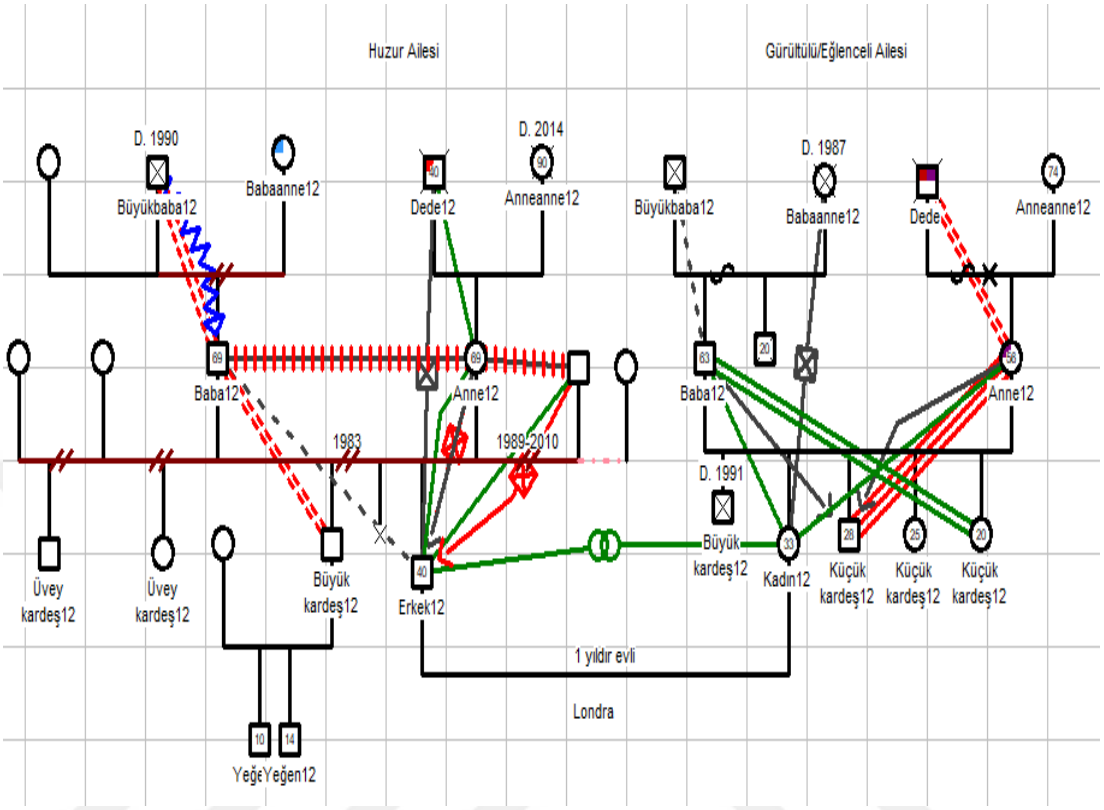

The participants are a man -Özgün- from serenity and a woman -Banu- from noisy/fun family. They are married for one year, graduated from a university, and live in London. While a woman works as a human resource manager, a man does his own job. The parents of the man got divorced due to trust issues/infidelity like the second marriage of the woman. His mother was an anxious person, and his stepfather has military discipline. For the first generation, the grandfather was a very authoritarian person, his father was still an angry and similarly conflictual relationship with his big son. On the other side, the brother of the woman was died due to a tragic accident when she was four years old, she feels so much guilt because of natural egocentric thought period, that incidence increases the controlling parenting behaviors of her parents and might affect the fused relationship between her little brother and her parents. Since she had experienced both emotional and instrumental parentification, there might be the intergeneration transmission of parentification over generations, since her father was working for thirteen years old, her mother was not allowed to go to school instead, should take care of her younger sister.

Family 13

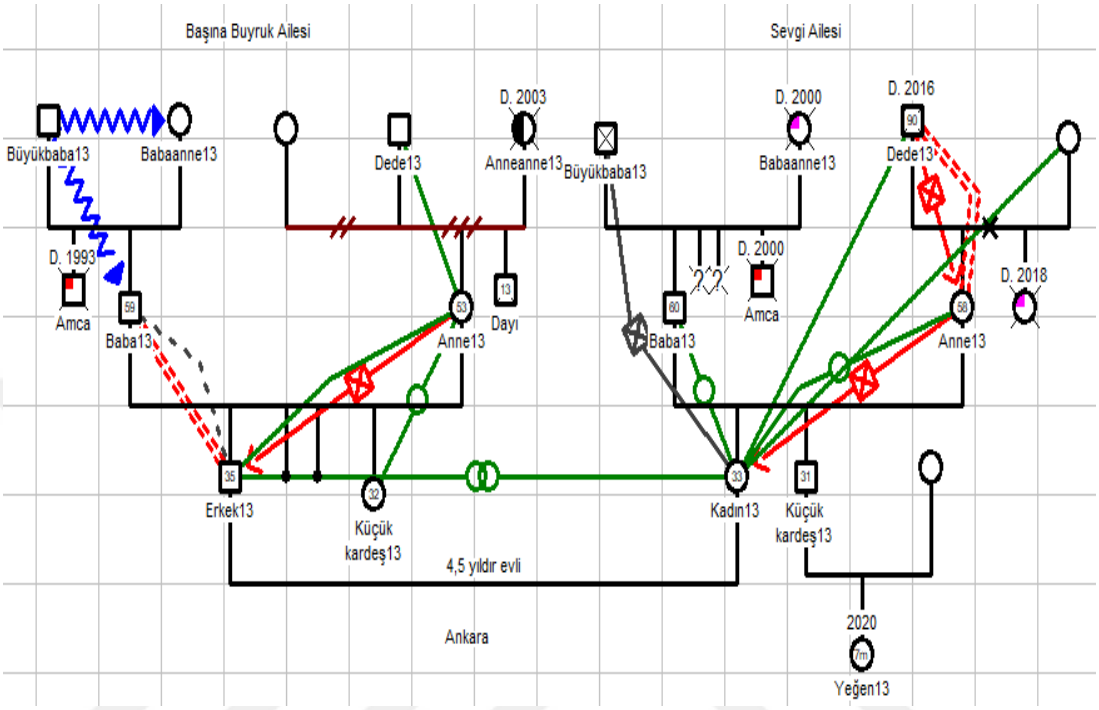

The participants are a man -Ömer- from self-ordained and a woman-Gizem- from a love family. They are married for four and half years, graduated from a university, and live in Ankara. While a woman works in the private sector, a man is working on his job. After his only boy was dead because of kidney failure, the grandmother was always feeling ill without any physical evidence then committed suicide. The emotional relationship of the man with his father is conflictual/ distant and with his mother based on love and control. On the other side for the woman, her mother was a bit oppressive woman during childhood unlike her spouse but similarly with his father then their emotional relationship gets better through the years. The first and second generation, the woman's mother was worked as a child laborer, her father was a very oppressive person who does not allow anything, but as her mother says, their parents didn't treat their grandchildren the way they treated us, so the emotional relationship of the first and third-generation for the woman is good. On the other side for man, the grandfather was also a dominant character everyone was afraid of him, who use physical violence towards his wife and children.

APPENDIX E: INFORMED CONSENT

Sayın Katılımcı,

Bu araştırma, TED Üniversitesi, Gelişim Odaklı Klinik Çocuk ve Ergen Programı'nda yüksek lisans eğitimine devam eden Psikolog Buket Baykal tarafından ve öğretim üyesi Doç. Dr. Ilgın Gökler Danışman'ın danışmanlığında yürütülmektedir. Araştırmanın amacı gönüllü olarak çocuk sahibi olmamayı tercih eden çiftlerin bu kararı verme süreçlerinde yaşadığı deneyimleri anlamaktır. Aşağıda anlatılacak olan çalışmaya davet edilmiş bulunmaktasınız. Bu çalışmada yer almayı kabul etmeden önce, çalışmanın ne amaçla yapıldığını anlamanız ve kararınızı bu bilgilendirme sonrasında vermeniz önem taşımaktadır. Aşağıdaki bilgilendirmeyi dikkatlice okuyup, lütfen aklınıza takılan her türlü soruyu sorunuz.

Bu araştırmaya katılmayı onayladığınız takdirde araştırmanın katılımcısı olacaksınız. Araştırma kapsamında sizlerle Zoom üzerinden online bir görüşme yapılacaktır. Çalışma süresince ve sonrasında kimlik bilgileriniz araştırma dışındaki hiç kimseyle izniniz dışında paylaşılmayacaktır. Bu çalışma kapsamında elde edilecek olan bilgiler sadece araştırmacılar tarafından yapılan bilimsel yayınlarda, sunumlarda ve eğitim amaçlı çevrimiçi bir ortamda paylaşılacaktır. Toplanan veriler isiminiz silinerek, bilgisayarda şifreli bir dosyada tutulacaktır. Veriyi analiz etme sürecinde bireysel bir analiz olmayacaktır. Tüm katılımcılardan alınacak veriler bir arada analiz edilecek ve kimlik bilgileriniz açığa çıkmayacak biçimde raporlandırılacaktır.

Bu çalışmaya katılım gönüllük esasına dayalıdır. 1 ya da 2 yüz yüze görüşmeden oluşan çalışmanın hiçbir aşaması, kişisel rahatsızlık verecek nitelikte değildir. Ancak herhangi bir nedenden ötürü kendinizi rahatsız hissederseniz, nedenini açıklamaksızın çalışmayı yarıda bırakıp araştırmadan çekilmekte serbestsiniz. Böyle bir durumda vermiş olduğunuz bilgilerin araştırmacı tarafından kullanılması ancak sizin onayınızla mümkün olacaktır. Bu çalışmaya katıldığınız için şimdiden teşekkür ederiz. Çalışma hakkında daha fazla bilgi almak ve yanıtlanmasını istediğiniz sorularınız için araştırmayı yürüten Buket Baykal ile (E-posta: iletişim kurabilirsiniz.

Bu bölüm katılımcı tarafından doldurulacaktır.

Bu çalışmaya tamamen gönüllü olarak katılıyorum ve istediğim zaman yarıda kesip çıkabileceğimi biliyorum. Verdiğim bilgilerin bilimsel amaçlı yayımlarda kullanılmasını kabul ediyorum. Araştırma süresince ses ve video kaydı alınacağını biliyorum.

Araştırmaya gönüllü olarak katılmayı kabul ediyorum.

Evet / Hayır

Ad Soyad:.....

Katılımcının İmzası: .....

Tarih .....

Teşekkürler,

Araştırmacının adı, soyadı ve imzası

Buket Baykal .....

Araştırmaya katılımınız ve haklarınızın korunmasına yönelik sorularınız varsa ya da herhangi bir şekilde risk altında olduğunuza veya strese maruz kalacağına inanıyorsanız TED Üniversitesi İnsan Araştırmaları Etik Kurulu'na
telefon numarasından veya eposta adresinden ulaşabilirsiniz.

APPENDIX F: SOCIAL MEDIA ANNOUNCEMENT TEXT

Merhaba,

TED Üniversitesi Gelişim Odaklı Klinik Çocuk ve Ergen Psikolojisi Programı kapsamında Doç. Dr. Öğr. Üyesi Ilgın Gökler Danışman danışmanlığında Buket Baykal tarafından yürütülen, **gönüllü olarak çocuk sahibi olmamayı tercih eden evli çiftlerle**, bu kararı verme süreçlerinde kuşaklararası aktarımın rolünü inceleyeceğimiz yüksek lisans tezim için sizlerin katılımına ihtiyaç duymaktayız. Çalışmamızın amacı kuşaklararası aktarımın çocuk sahibi olmamayı tercih eden çiftlerin karar verme sürecindeki etkisini incelemektir.

Araştırmanın katılımcılarının her iki çiftin de gönüllü olarak çocuk sahibi olmamayı tercih ettiğini beyan eden evli çiftlerden oluşmasını hedefliyoruz. Gönüllü olarak çalışmaya katılmak isteyen katılımcılarla çocuk sahibi olmak istememe karar sürecini derinlemesine incelenmek üzerine yarı yapılandırılmış görüşmeler yapmayı amaçlıyoruz. Söz konusu görüşmeleri pandemi koşulları gereği Zoom üzerinden online olarak gerçekleştirmeyi planlıyoruz.

Sözü edilen bu araştırmada eşinizle beraber katılımcı olmak isterseniz aşağıda verilen iletişim bilgisi üzerinden benimle iletişime geçebilirsiniz.

Zaman ayırdığınız için teşekkür ederiz.